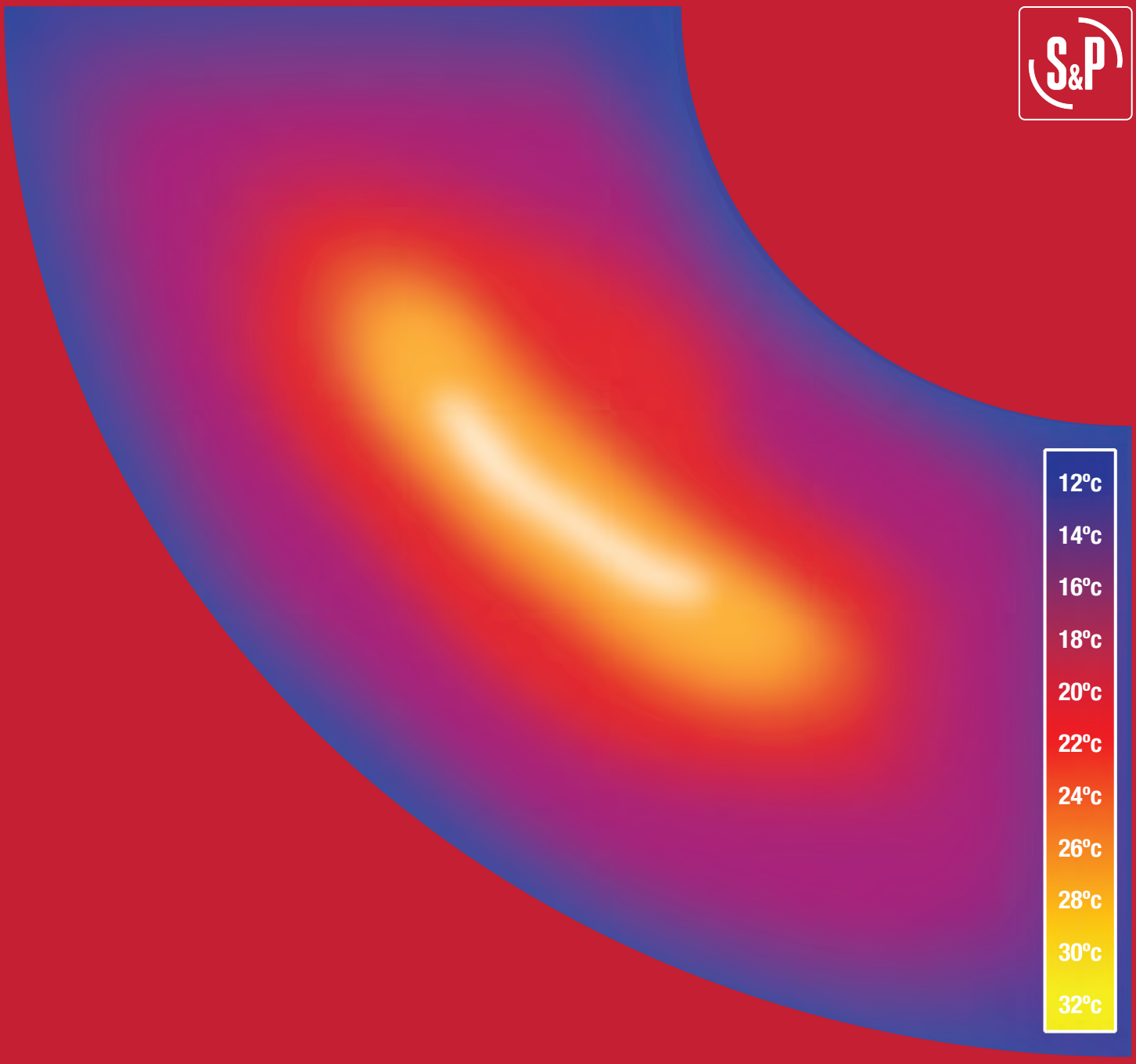

COMMERCIAL HEAT RECOVERY & AIR HANDLING UNITS

Soler&Palau
Ventilation Group

The UTBS are low profile air handling units designed specifically for installation in false ceiling.
The framework is made of extruded aluminium profiles and reinforced nylon corner joints.
Double skin sandwich panels with 25 mm mineral wool insulation (good thermal and acoustic performance).
Plastic coated outer panel and galvanised steel inner panel.
Different combinations of water and direct expansion coils and electric batteries.

Motors
- Plug fans with AC 3-phase motors, class F.
- UTBS-2 and 3 models are equipped with one fan and UTBS-5 and 8 have two in-parallel fans.
- Supply power of fan via built-in frequency converter.

Filters
F7 Filter supplied with the unit. Possibility of mounting a second filter (accessory). Filter with low pressure drop.

Components/modules:
- Sound attenuators
- Filtering boxes
- Mixing boxes

Robust construction
High quality finishing with aluminium profile structure, providing a robust and tight assembly.

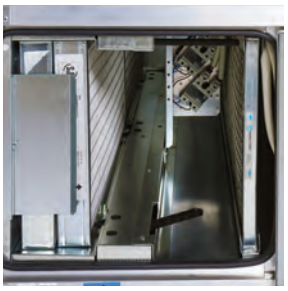

Clamping system
Via articulated arm, that allows maximum tightness of the filtering section.

CONTROL
UTBS PRO-REG includes integral operating control. It includes manual or automatic control of the fan for VAV, CAV or COP modes:

VAV- variable air volume
Fan speed can be adjusted via analogue 0-10V signal.

CAV - constant air volume
Fan speed can be adjusted to allow a constant airflow.

COP - constant pressure
Fan speed can be adjusted to mantain a contant pressure in the ducting system.

Coils management
Versions equipped with coils allow the management of the chilled/hot water via temperature probes included in the unit.

* See complete table of control functionalities.

PLUG & PLAY

Full controls package integrated

CONSTRUCTIVE ADVANTAGES

Easy access to filters
Access to change the filters by the side or bottom panel.

Condensate drip tray
Versions with stainless steel water and direct expansion coils with side outlet

Fans
Built-in Plug-fans with backward curved impeller controlled via frequency converter.

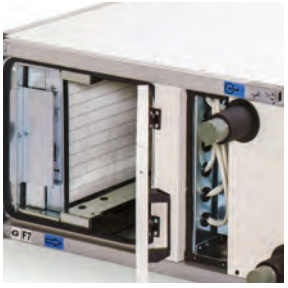

Heater Batteries
Possibility of integrating water or expansion coils and electric batteries.

Integrated control
Integrated electronic control, inside the unit.

TECHNICAL CHARACTERISTICS

Ventilation section

Sizes 2 and 3 have one fan, whereas sizes 5 and 8 have two.
For each size, the motor power setting ensures highest efficiency at the working point.
The regulation via frequency converter allows a high efficiency at the requested working-point.

UTBS PRO-REG Model	Maximum airflow (m³/h)			Motor Power (kW)	Frequency range (Hz)
	Chilled coil	Hot coil	without coils		
2	1300	1500	1500	1x0,55	20-55
3	2500	2500	2500	1x0,75	20-50
5	3800	4500	5100	2x0,75	20-50
8	6500	7400	7500	2x1,1	20-50

Coil section

Water coils
One or two water coils can be included in the section. (one heating or one cooling coil or both at the same time).
The units can be supplied with 2 or4 rows for heating coils and 4 or 6-row for cooling coils.
If the unit includes a cooling coil it is always supplied as a standard with condensate drip tray made from stainless steel AISI 304 and a droplet eliminator.
The connections of the water coil and the drip tray can be ordered on left side or right side of the unit.

UTBS PRO-REG Model	Air flow (m³/h)	Coils Thermal power (kW)						Inlet/Outlet connections
		Hot water coil				Chilled water coil		
		H2		H4		C4	C6	
		80ºC/60ºC	50ºC/45ºC	80ºC/60ºC	50ºC/45ºC	7ºC/12ºC	7ºC/12ºC	
2	900	11,9	8,3	18,2	22,7	8,1	9,6	1-1/4" GM
	1200	14,4	10,0	22,7	15,5	10,0	11,9	
3	1700	23,5	16,0	34,7	23,5	15,5	20,0	1-1/4" GM
	2500	30,5	20,9	46,8	31,9	20,5	23,3	
5	2500	33,9	23,3	51,2	34,7	23,2	29,2	1-1/4" GM
	3500	42,7	29,4	66,6	45,2	29,6	38,4	
8	4000	55,0	37,7	81,4	55,4	36,0	46,8	1-1/2" GM
	6000	72,5	49,8	111,5	76,1	48,2	64,8	

*Air inlet temperature: -5ºC, Rel. Hum: 80%
**Air inlet temperature: 32ºC, Rel. Hum: 50%

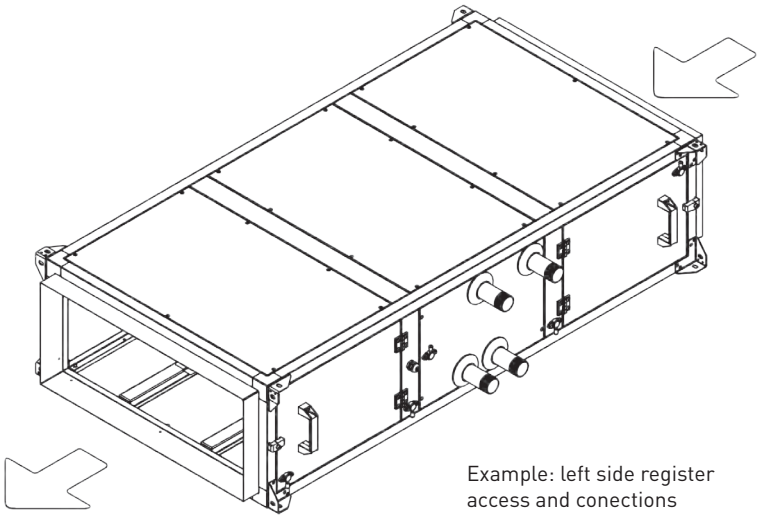

Example: left side register access and conections

Electric heaters

The unit can be supplied with electric heaters made of shielded resistances with a galvanised sheet frame. The heaters are equipped with safety protection with manual and automatic reset. The heater has an anti-radiation screen to protect the filters.

Model	Available electric power / Stages					
UTBS-2	E3	4,5 kW/ 1et.	E2	15,0 kW/ 2et.		
UTBS-3	E6	6,0 kW/ 1et.	E7	15,0 kW/ 2et.	E2	24,0 kW/ 2et.
UTBS-5	E4	9,0 kW/ 2et.	E1	15,0 kW/ 2et.	E3	36,0 kW/ 3et.
UTBS-8	E1	15,0 kW/ 2et.	E4	24,0 kW/ 2et.	E3	45,0 kW/ 3et.

Direct expansion coil (DX)

The unit can be supplied with expansion direct coils for R-410A gas. Compatible with the main control kits of the market.

4 rows coil

For applications with 100% recirculated air.

						COOLING					HEATING				
Model	Air flow (m^3/h)	Volumen (dm^3)	Nº Stages	Ø Distributor (Liquid line) líquido	Ø Colector (Gas Line)	Power* (kW)	Supply air Temp. (ºC)	Rel. Hum. (%)	R410A Airflow (kg/h)	ΔP R410A (kg/h)	Power** (kW)	Supply air Temp. (ºC)	Rel. Hum. (%)	R410A Airflow (kg/h)	ΔP R410A (kg/h)
UTBS-2	1250	1,2	1	1/2"	3/4"	4,6	14,2	87	84,6	14,96	4,9	32,7	25	87,9	9,6
UTBS-3	2500	2,21	1	5/8"	3/4"	8,8	14,4	87	163,3	13,00	8,0	33,6	28	143,4	6,1
UTBS-5	3500	2,41	1	5/8"	3/4"	10,9	15,2	85	200,0	10,90	10,0	32,7	30	180,2	5,1
UTBS-8	6000	4,4	1	5/8"	3/4"	19,9	14,9	86	368,3	22,10	17,2	32,7	30	310,1	8,8

*Air Inlet 24ºC / 50%R.H.

**Air Inlet 21ºC / 50%R.H.

6 rows coil

For applications with 50% outdoor air/ 50% recirculated air

						COOLING					HEATING				
Model	Air flow (m^3/h)	Volumen (dm^3)	Nº Stages	Ø Distributor (Liquid line) líquido	Ø Colector (Gas Line)	Power* (kW)	Supply air Temp. (ºC)	Rel. Hum. (%)	R410A Air-flow (kg/h)	ΔP R410A (kg/h)	Power** (kW)	Supply air Temp. (ºC)	Rel. Hum. (%)	R410A Airflow (kg/h)	ΔP R410A (kg/h)
UTBS-2	1250	2	1	5/8"	3/4"	10,0	14,5	94	185,3	8,60	10,5	34,4	17	190,5	5,10
UTBS-3	2500	3,31	1	5/8"	3/4"	19,4	14,9	94	358,6	25,30	19,9	30,8	18	359,0	13,70
UTBS-5	3500	4,3	1	5/8"	7/8"	26,6	15,2	94	490,5	18,60	27,6	30,6	18	498,0	10,30
UTBS-8	6000	8,4	2	5/8"	7/8"	47,8	14,6	94	882,0	25,30	49,8	31,8	17	897,0	12,30

*Air Inlet 29ºC / 55%R.H.

**Air Inlet 8ºC / 75%R.H.

Filtering section

The filtering section has one flat filter made from galvanised steel frame.
This section includes a specific rail to fit a second filter (supplied as an accessory).

Prefilters

Mounting system via rails included.
Available prefilters (accessories): G4/M5.

Final filtration

Mounting system via fast-clamps that allow a perfect tightness within the frame.
Standard filter (supplied with the unit): F7
Available filters F6, F8 or F9 filters with an efficiency level above 60%.
The filters have been manufactured according to UNE 779:2013.

TECHNICAL CHARACTERISTICS- SUMMARY

Units with electrical coil

	Complete unit				Fan			Electric heater	
	Rectangular duct connection (mm.)	Maximum airflow (m^3/h)	Power supply	Max. Current (A)	Power (kW)	Max. Current (A)	Frequency (Hz)	Heating power (kW)	Max. Current (A)
UTBS-2 PRO-REG	690 x 300	1500	3+N/400V, 50Hz	13,7	0,55	6,8	20 - 55	4,5	6,9
				29,8				15	23
UTBS-3 PRO-REG	1040 x 350	2500	3+N/400V, 50Hz	18,1	0,75	8,9	20 - 50	6	9,2
				31,9				15	23
				45,4				24	36,5
UTBS-5 PRO-REG	1440 x 350	5100	3+N/400V, 50Hz	37,6	2 x 0,75	2 x 8,15	20 - 50	9	13,7
				46,9				15	23
				78,6				36	54,7
UTBS-8 PRO-REG	1840 x 440	7500	3+N/400V, 50Hz	46,9	2 x 1,1	2 x 12	20 - 50	15	23
				60,4				24	36,5
				92,4				45	68,5

Units with heat water coil

	Complete unit				Fan			Water coil H2	Water coil H4
	Rectangular duct connection (mm.)	Maximum airflow (m3/h)	Power supply	Max. Current (A)	Power (kW)	Max. Current (A)	Frequency (Hz)	Heating power (kW)	Max. Current (A)
UTBS-2 PRO-REG	690 x 300	1500	1F /230V, 50Hz	6,8	0,55	6,8	20 - 55	10 - 14,4	22,7 - 15,5
UTBS-3 PRO-REG	1040 x 350	2500	1F /230V, 50Hz	8,9	0,75	8,9	20 - 50	20,9 - 30,5	46,8 - 31,9
UTBS-5 PRO-REG	1440 x 350	5100	1F /230V, 50Hz	16,3	2 x 0,75	2 x 8,15	20 - 50	29,4 - 42,7	66,6 - 45,2
UTBS-8 PRO-REG	1840 x 440	7500	1F /230V, 50Hz	23,9	2 x 1,1	2 x 12	20 - 50	49,8 - 72,5	111,5 - 76,1

Units with cool water coil

	Complete unit				Fan			Water coil C4	Water coil C6
	Rectangular duct connection (mm.)	Maximum airflow (m3/h)	Power supply	Max. Current (A)	Power (kW)	Max. Current (A)	Frequency (Hz)	Heating power (kW)	Max. Current (A)
UTBS-2 PRO-REG	690 x 300	1300	1F /230V, 50Hz	6,8	0,55	6,8	20 - 55	10	11,9
UTBS-3 PRO-REG	1040 x 350	2500	1F /230V, 50Hz	8,9	0,75	8,9	20 - 50	20,5	23,3
UTBS-5 PRO-REG	1440 x 350	3800	1F /230V, 50Hz	16,3	2 x 0,75	2 x 8,15	20 - 50	29,6	38,4
UTBS-8 PRO-REG	1840 x 440	6500	1F /230V, 50Hz	23,9	2 x 1,1	2 x 12	20 - 50	48,2	64,8

PLUG & PLAY CONTROL PRO-REG FUNCTIONS

	Without batteries	With water coils	With electrical battery	With DX battery
MAIN COMPONENTS				
General proximity switch over the electrical box	•	•	•	•
Fresh air temperature probe	-	•	•	•
Extract air temperature probe	-	•	•	•
Supply air temperature probe	-	•	•	•
Defrost temperature probe		•		
CHANGE OVER thermostat to be installed on the water supply coil	-	O	-	-
3 way valve with proportional 0-10V actuator 3WV PROP 24V	-	O	-	-
Frequency converter	•	•	•	•
Clogged filters switches	•	•	•	•
FEATURES				
ON/OFF function (Remote ON/OFF via external power free contact)	•	•	•	•
Automatic airflow adjustment, according to time band (internal Timer)	•	•	•	•
Flow control in CAV mode. Constant airflow regardless of the state of fouling of the filters.	•	•	•	•
Automatic airflow adjustment in VAV mode, according to external signal 0-10V (CO2 accessory)	•	•	•	-
Automatic speed adjustment of the fans in Constant Pressure mode (Increase of fan speed when pressure in the duct system decreases). It is necessary TDP-S accessory.	•	•	•	-
BOOST function (Forced speed preset via external power free contact)	•	•	•	•
Regulation of water coil thermal power. 0-10V control of the water valve (accessory).	-	•	-	-
Regulation of electric heater battery thermal power. Proportional control via SSR.	-	-	•	-
Proportional control of thermal demand (0-10V output signal) to manage expansion valve kit (verify compatibility with used DX control valve kit)	-	-	-	•
Isolation damper control (accessory)	•	•	•	•
Operation of an external mixing box (accessory)	•	•	•	-
Speed-control of an external fan (slave) with analogic signal 0-10V available.	•	•	•	•
CONTROL AND SAFETY				
Control of clogged filters via pressure switches (included)	•	•	•	•
Failure in temperature probes	•	•	•	•
Failure in fan via pressure switches (included)	•	•	•	•
Anti-frost protection of water coils	-	•	-	-
Alarm display	•	•	•	•
COMMUNICATION				
Control via touch-screen included	•	•	•	•
Modbus RTU (RS-485)	•	•	•	•
BACNET TCP/IP	•	•	•	•

• included O optional - Not available

STANDARD CONFIGURATION

Fan

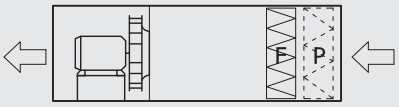

P: Prefilter G4/M5 (accessory)
F: Filter F7

Fan+Heating

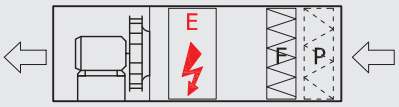

P: Prefilter G4/M5 (accessory)
F: Filter F7
E: Electric battery (E1 to E7)

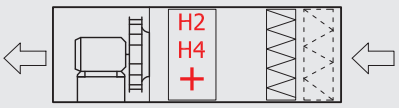

P: Prefilter G4/M5 (accessory)
F: Filter F7
H2: 2 Rows hot water coil
H4: 4 Rows hot water coil

Fan+Cooling

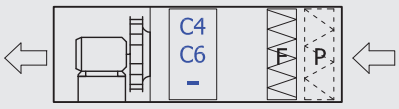

P: Prefilter G4/M5 (accessory)
F: Filter F7
C4: 4 Rows cool water coil
C6: 6 Rows cool water coil

P: Prefilter G4/M5 (accessory)
F: Filter F7
C4: 4 Rows direct expansion coil
C6: 6 Rows direct expansion coil

Fan+Heating+Cooling

P: Prefilter G4/M5 (accessory)
F: Filter F7
H2: 2 Rows hot water coil
C4: 4 Rows cool water coil
C6: 6 Rows cool water coil

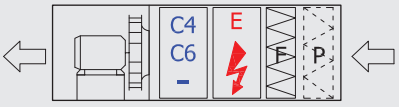

P: Prefilter G4/M5 (accessory)
F: Filter F7
E: Electric battery (E1 to E7)
C4: 4 Rows cool water coil
C6: 6 Rows cool water coil

All the versions are available with maintenance side on the left or right side (according to air flow sense)

ACOUSTIC CHARACTERISTICS - UTBS 2 PRO-REG

Airflow (m³/h)	Total Pressure (Pa)	Sound power levels at inlet (Lw(A)) Frequency (Hz) 63	125	250	500	1000	2000	4000	8000	Lp(A) @3m dB(A)
500	200	45	52	57	53	49	43	40	35	40
	400	53	60	65	60	56	50	47	42	48
1000	200	45	52	57	53	49	43	40	35	40
	400	51	58	63	59	55	49	46	41	46
	600	57	64	69	64	60	54	51	46	50
	800	60	67	72	68	64	58	55	50	55
1500	200	51	58	63	59	55	49	46	41	46
	400	53	60	65	61	57	51	48	43	48
	600	56	63	68	64	60	54	51	46	51
	800	59	66	71	66	62	56	53	48	54

Airflow (m³/h)	Total Pressure (Pa)	Sound power levels at inlet (Lw(A)) Frequency (Hz) 63	125	250	500	1000	2000	4000	8000	Lp(A) @3m dB(A)
500	200	36	48	56	59	61	62	57	54	47
	400	44	56	64	66	68	69	64	61	54
1000	200	36	48	56	59	61	62	57	54	47
	400	42	54	62	65	67	68	63	60	53
	600	48	60	68	70	72	73	68	65	58
	800	51	63	71	74	76	77	72	69	62
1500	200	42	54	62	65	67	68	63	60	53
	400	44	56	64	67	69	70	65	62	55
	600	47	59	67	70	72	73	68	65	57
	800	50	62	70	72	74	75	70	67	60

Airflow (m³/h)	Total Pressure (Pa)	Sound power levels at inlet (Lw(A)) Frequency (Hz) 63	125	250	500	1000	2000	4000	8000	Lp(A) @3m dB(A)
500	200	32	36	43	38	44	44	39	35	30
	400	40	44	51	46	52	52	47	43	37
1000	200	32	36	43	38	44	44	39	35	30
	400	38	42	49	44	50	50	45	41	36
	600	44	48	55	49	55	55	50	46	41
	800	47	51	58	53	59	59	54	50	45
1500	200	38	42	49	44	50	50	45	41	36
	400	40	44	51	46	52	52	47	43	38
	600	43	47	54	49	55	55	50	46	41
	800	46	50	57	51	57	57	52	48	43

THERMAL CHARACTERISTICS - UTBS 2 PRO-REG

2-row heating coil									
Airflow (m³/h)		900 (m³/h)				1200 (m³/h)			
Water T. (ºC)	Ext. T. (ºC)	Power (kW)	Output T. (ºC)	Water flow (l/s)	Water pressure drop (kPa)	Power (kW)	Output T. (ºC)	Water flow (l/s)	Water pressure drop (kPa)
80/60	-10	12,6	32,1	0,15	3,4	15,3	28,4	0,18	4,8
	-5	11,9	34,7	0,14	3,0	14,4	31,1	0,17	4,3
	0	11,1	37,1	0,13	2,7	13,5	33,8	0,16	3,8
	5	10,3	39,5	0,12	2,3	12,5	36,4	0,15	3,4
	10	9,6	41,8	0,11	2,0	11,6	39,0	0,14	2,9
50/45	-10	9,0	19,9	0,43	25,0	10,9	17,2	0,52	36,0
	-5	8,3	22,5	0,40	21,5	10,0	20,1	0,48	30,8
	0	7,5	25,0	0,36	18,0	9,1	22,8	0,43	25,9
	5	6,8	27,5	0,32	14,8	8,2	25,5	0,39	21,2
	10	6,0	29,9	0,29	11,8	7,7	28,1	0,34	17,0

4-row heating coil									
Airflow (m³/h)		900 (m³/h)				1200 (m³/h)			
Water T. (ºC)	Ext. T. (ºC)	Power (kW)	Output T. (ºC)	Water flow (l/s)	Water pressure drop (kPa)	Power (kW)	Output T. (ºC)	Water flow (l/s)	Water pressure drop (kPa)
80/60	-10	19,3	54,3	0,23	4,6	24,1	50,3	0,29	6,9
	-5	18,2	55,6	0,22	4,1	22,7	51,9	0,27	6,2
	0	17,0	56,8	0,20	3,6	21,3	53,3	0,25	5,5
	5	15,9	57,9	0,19	3,2	19,9	54,6	0,24	4,8
	10	14,7	59,0	0,18	2,8	18,3	55,9	0,22	4,2
50/45	-10	13,5	34,8	0,64	32,8	16,8	32,1	0,80	49,6
	-5	12,4	36,2	0,59	28,0	15,5	33,7	0,75	42,5
	0	11,2	37,4	0,54	23,5	14,1	35,2	0,66	35,7
	5	10,1	38,7	0,48	19,4	12,6	36,6	0,61	29,7
	10	8,9	39,8	0,43	15,5	11,2	38,1	0,52	23,5

4-row heating coil									
Airflow (m³/h)		900 (m³/h)				1200 (m³/h)			
Water T. (ºC)	Ext. T. (ºC)	Power (kW)	Output T. (ºC)	Water flow (l/s)	Water pressure drop (kPa)	Power (kW)	Output T. (ºC)	Water flow (l/s)	Water pressure drop (kPa)
7/12	25 / 50%	3,4	15,4 / 84,7%	0,16	2,5	4,2	15,9 / 82,2%	0,20	3,9
	27 / 50%	4,6	15,6 / 86%	0,22	4,6	5,7	16,3 / 83,3%	0,27	7,1
	32 / 50%	8,1	16,5/ 87,7%	0,39	14,3	10,0	17,5 / 85,0%	0,48	21,7

6-row heating coil									
Airflow (m³/h)		900 (m³/h)				1200 (m³/h)			
Water T. (ºC)	Ext. T. (ºC)	Power (kW)	Output T. (ºC)	Water flow (l/s)	Water pressure drop (kPa)	Power (kW)	Output T. (ºC)	Water flow (l/s)	Water pressure drop (kPa)
7/12	25 / 50%	3,7	14,2 / 91,3%	0,18	1,2	4,8	14,5 / 89,4%	0,23	1,8
	27 / 50%	5,2	14,1 / 93,2%	0,25	2,1	6,7	14,5 / 91,1%	0,32	3,4
	32 / 50%	9,6	13,8 / 94,8%	0,46	7,1	11,9	14,8 / 92,7%	0,57	11,0

ACOUSTIC CHARACTERISTICS - UTBS 3 PRO-REG

Airflow (m^3/h)	Total Pressure (Pa)	Sound power levels at inlet (Lw(A)) Frequency (Hz) 63	125	250	500	1000	2000	4000	8000	Lp(A) @3m dB(A)
1000	400	51	58	63	59	55	49	46	41	46
	600	57	64	69	64	60	54	51	46	52
	800	60	67	72	68	64	58	55	50	55
2000	400	55	62	67	62	58	52	49	44	50
	800	60	67	72	67	63	57	54	49	55
	1200	64	71	76	72	68	62	59	54	59
	1600	68	75	80	76	72	66	63	58	63

Airflow (m^3/h)	Total Pressure (Pa)	Sound power levels at inlet (Lw(A)) Frequency (Hz) 63	125	250	500	1000	2000	4000	8000	Lp(A) @3m dB(A)
1000	400	42	54	62	65	67	68	63	60	53
	600	48	60	68	70	72	73	68	65	58
	800	51	63	71	74	76	77	72	69	62
2000	400	46	58	66	68	70	71	66	63	59
	800	51	63	71	73	75	76	71	68	61
	1200	55	67	75	78	80	81	76	73	66
	1600	59	71	79	82	84	85	80	77	70

Airflow (m^3/h)	Total Pressure (Pa)	Sound power levels at inlet (Lw(A)) Frequency (Hz) 63	125	250	500	1000	2000	4000	8000	Lp(A) @3m dB(A)
1000	400	38	42	49	44	50	50	45	41	36
	600	44	48	55	49	55	55	50	46	41
	800	47	51	58	53	59	59	54	50	45
2000	400	42	46	53	48	54	54	49	45	39
	800	47	51	58	53	59	59	54	50	44
	1200	52	56	63	57	63	63	58	54	49
	1600	56	60	67	61	67	67	62	58	53

THERMAL CHARACTERISTICS - UTBS 3 PRO-REG

2-row heating coil									
Airflow (m³/h)		1700 (m³/h)				2500 (m³/h)			
Water T. (ºC)	Ext. T. (ºC)	Power (kW)	Output T. (ºC)	Water flow (l/s)	Water pressure drop (kPa)	Power (kW)	Output T. (ºC)	Water flow (l/s)	Water pressure drop (kPa)
80/60	-10	27,9	33,9	0,30	6,7	32,4	28,8	0,39	10,9
	-5	23,5	36,4	0,28	6,1	30,5	31,6	0,36	9,8
	0	22,0	38,8	0,26	5,4	28,6	34,3	0,34	8,7
	5	20,5	41,1	0,25	4,7	26,6	36,9	0,32	7,6
	10	18,9	43,4	0,23	4,1	24,6	39,5	0,29	6,6
50/45	-10	17,4	20,8	0,83	48,2	22,7	17,2	1,08	78,2
	-5	16,0	23,3	0,77	41,5	20,9	20,0	1,00	67,2
	0	14,6	25,8	0,70	35,0	19,0	22,8	0,91	56,7
	5	13,2	28,2	0,63	28,9	17,2	25,5	0,82	46,8
	10	11,7	30,6	0,56	23,2	15,2	28,2	0,72	37,6

4-row heating coil									
Airflow (m³/h)		1700 (m³/h)				2500 (m³/h)			
Water T. (ºC)	Ext. T. (ºC)	Power (kW)	Output T. (ºC)	Water flow (l/s)	Water pressure drop (kPa)	Power (kW)	Output T. (ºC)	Water flow (l/s)	Water pressure drop (kPa)
80/60	-10	36,8	55,0	0,44	4,4	49,7	49,7	0,59	7,7
	-5	34,7	56,2	0,42	3,9	46,8	51,2	0,56	6,8
	0	32,5	57,4	0,39	3,5	43,8	52,6	0,52	6,1
	5	30,3	58,4	0,36	3,1	40,9	54,0	0,49	5,3
	10	28,0	59,5	0,34	2,7	37,8	55,3	0,45	4,6
50/45	-10	25,7	32,6	1,23	31,5	34,7	31,6	1,60	55,0
	-5	23,5	36,6	1,13	26,9	31,9	33,2	1,50	47,0
	0	21,4	37,8	1,02	22,6	29,0	34,8	1,39	39,5
	5	19,3	39,0	0,92	18,6	26,1	36,3	1,25	32,5
	10	17,1	40,1	0,82	14,9	23,1	37,7	1,10	26,0

4-row heating coil									
Airflow (m³/h)		1700 (m³/h)				2500 (m³/h)			
Water T. (ºC)	Ext. T. (ºC)	Power (kW)	Output T. (ºC)	Water flow (l/s)	Water pressure drop (kPa)	Power (kW)	Output T. (ºC)	Water flow (l/s)	Water pressure drop (kPa)
7/12	25 / 50%	6,2	15,45/85%	0,3	2,2	8,6	16,1 / 81,7%	0,41	4,2
	27 / 50%	8,7	15,56/86,5%	0,42	4,3	11,6	16,5 / 82,8%	0,55	7,7
	32 / 50%	15,5	16,32/88,1%	0,74	13,6	20,5	17,7 / 84,4%	0,98	23,8

6-row heating coil									
Airflow (m³/h)		1700 (m³/h)				2500 (m³/h)			
Water T. (ºC)	Ext. T. (ºC)	Power (kW)	Output T. (ºC)	Water flow (l/s)	Water pressure drop (kPa)	Power (kW)	Output T. (ºC)	Water flow (l/s)	Water pressure drop (kPa)
7/12	25 / 50%	9,6	12,13/93,5%	0,46	7,2	12,9	13,0 / 90,5%	0,62	13,1
	27 / 50%	12,3	12,18/94,1%	0,59	12,0	16,6	13,2 / 91,1%	0,79	21,7
	32 / 50%	20,0	12,38/95,5%	0,96	31,5	23,3	13,7 / 92,8%	1,31	57,4

ACOUSTIC CHARACTERISTICS - UTBS 5 PRO-REG

Airflow (m³/h)	Total Pressure (Pa)	Sound power levels at inlet (Lw(A)) Frequency (Hz) 63	125	250	500	1000	2000	4000	8000	Lp(A) @3m dB(A)
2000	400	56	63	68	64	60	54	51	46	51
	800	65	72	77	72	68	62	59	54	59
3000	400	56	63	68	63	59	53	50	45	50
	800	64	71	76	71	67	61	58	53	59
	1200	69	76	81	76	72	66	63	58	64
	1600	72	79	84	80	76	70	67	62	67
4000	400	58	65	70	65	61	55	52	47	53
	800	63	70	75	70	66	60	57	52	58
	1200	67	74	79	75	71	65	62	57	60
	1600	71	78	83	79	75	69	66	61	66
5000	400	61	68	73	69	65	59	56	51	56
	800	64	71	76	72	68	62	59	54	59
	1200	67	74	79	75	71	65	62	57	62
	1600	70	77	82	78	74	68	65	60	65

Airflow (m³/h)	Total Pressure (Pa)	Sound power levels at inlet (Lw(A)) Frequency (Hz) 63	125	250	500	1000	2000	4000	8000	Lp(A) @3m dB(A)
2000	400	47	59	67	70	72	73	68	65	58
	800	56	68	76	78	80	81	76	73	66
3000	400	47	59	67	69	71	72	67	64	57
	800	55	67	75	77	79	80	75	72	65
	1200	60	72	80	82	84	85	80	77	70
	1600	63	75	83	86	88	89	84	81	74
4000	400	49	61	69	71	73	74	69	66	59
	800	54	66	74	76	78	79	74	71	64
	1200	58	70	78	81	83	84	79	76	69
	1600	62	74	82	85	87	88	83	80	73
5000	400	52	64	72	75	77	78	73	70	63
	800	55	67	75	78	80	81	76	73	66
	1200	58	70	78	81	83	84	79	76	69
	1600	61	73	81	84	86	87	82	79	72

Airflow (m³/h)	Total Pressure (Pa)	Sound power levels at inlet (Lw(A)) Frequency (Hz) 63	125	250	500	1000	2000	4000	8000	Lp(A) @3m dB(A)
2000	400	44	48	55	49	55	55	50	46	41
	800	52	56	63	57	63	63	58	54	49
3000	400	43	47	54	48	54	54	49	45	40
	800	51	55	62	56	62	62	57	53	48
	1200	56	60	67	61	67	67	62	58	53
	1600	59	63	70	65	71	71	66	62	57
4000	400	45	49	56	51	57	57	52	48	42
	800	50	54	61	55	61	61	56	52	47
	1200	55	59	66	60	66	66	61	57	52
	1600	59	63	70	64	70	70	65	61	56
5000	400	49	53	60	54	60	60	55	51	46
	800	51	55	62	57	63	63	58	54	49
	1200	54	58	65	60	66	66	61	57	52
	1600	57	61	68	63	69	69	64	60	55

THERMAL CHARACTERISTICS - UTBS 5 PRO-REG

2-row heating coil									
Airflow (m³/h)		2500 (m³/h)				4500 (m³/h)			
Water T. (ºC)	Ext. T. (ºC)	Power (kW)	Output T. (ºC)	Water flow (l/s)	Water pressure drop (kPa)	Power (kW)	Output T. (ºC)	Water flow (l/s)	Water pressure drop (kPa)
80/60	-10	36	33,2	0,43	4,9	56,6	25,7	0,64	10,1
	-5	33,9	35,7	0,41	4,4	50,5	28,7	0,6	9,1
	0	31,8	38,1	0,38	3,9	47,3	31,5	0,57	8
	5	29,6	40,5	0,35	3,4	44	34,3	0,53	7,1
	10	27,3	42,8	0,33	2,9	40,6	37,1	0,49	6,1
50/45	-10	25,4	20,5	1,21	35,7	37,8	15,2	1,81	74,3
	-5	23,3	23	1,12	30,6	34,8	18,2	1,67	63,7
	0	21,3	25,5	1,02	25,7	31,7	21,1	1,52	53,6
	5	19,1	27,9	0,92	21,2	28,5	24,1	1,36	44,2
	10	16,9	30,3	0,81	17	25,3	26,8	1,21	35,3

4-row heating coil									
Airflow (m³/h)		2500 (m³/h)				4500 (m³/h)			
Water T. (ºC)	Ext. T. (ºC)	Power (kW)	Output T. (ºC)	Water flow (l/s)	Water pressure drop (kPa)	Power (kW)	Output T. (ºC)	Water flow (l/s)	Water pressure drop (kPa)
80/60	-10	54,3	55,2	0,65	6,1	85,6	47	1,02	14,2
	-5	51,2	56,4	0,61	5,5	80,6	48,7	0,96	12,7
	0	48	57,6	0,57	4,9	75,6	50,4	0,9	11,3
	5	44,7	58,7	0,54	4,3	70,4	51,9	0,84	9,9
	10	41,4	59,7	0,5	3,7	65,2	53,5	0,78	8,6
50/45	-10	37,7	35,3	1,8	43,7	59,6	29,7	2,85	102,4
	-5	34,7	36,6	1,66	37,4	54,8	31,5	2,62	87,5
	0	31,5	37,8	1,51	31,3	49,9	33,3	2,39	73,5
	5	28,3	39	1,36	25,8	44,9	39,4	2,15	60,4
	10	25,1	40,1	1,2	20,6	39,8	36,5	1,9	48,2

4-row heating coil									
Airflow (m³/h)		2500 (m³/h)				4000 (m³/h)			
Water T. (ºC)	Ext. T. (ºC)	Power (kW)	Output T. (ºC)	Water flow (l/s)	Water pressure drop (kPa)	Power (kW)	Output T. (ºC)	Water flow (l/s)	Water pressure drop (kPa)
7/12	25 / 50%	9,7	15,1 / 853%	0,5	3,4	14,2	16 / 81,1%	0,68	7,4
	27 / 50%	13,5	15,2 / 86,4%	0,65	6,7	18,7	16,6 / 81,9%	0,9	12,8
	32 / 50%	23,2	16,1 / 88,1%	1,11	19,6	32,6	17,9 / 83,6%	1,56	38,8

6-row heating coil									
Airflow (m³/h)		2500 (m³/h)				4000 (m³/h)			
Water T. (ºC)	Ext. T. (ºC)	Power (kW)	Output T. (ºC)	Water flow (l/s)	Water pressure drop (kPa)	Power (kW)	Output T. (ºC)	Water flow (l/s)	Water pressure drop (kPa)
7/12	25 / 50%	13,9	12,3 / 93,4%	0,66	7,2	21,7	13,6 / 88,6%	1,04	17,6
	27 / 50%	18	12,3 / 94%	0,86	12,1	28,1	13,9 / 89,3%	1,35	29,5
	32 / 50%	29,2	12,5 / 95,4%	1,4	31,9	46,8	14,5 / 91,1%	2,24	78,3

ACOUSTIC CHARACTERISTICS - UTBS 8 PRO-REG

Airflow (m³/h)	Total Pressure (Pa)	Sound power levels at inlet (Lw(A)) Frequency (Hz) 63	125	250	500	1000	2000	4000	8000	Lp(A) @3m dB(A)
3000	400	56	63	68	64	60	54	51	46	51
	800	65	72	77	73	69	63	60	55	60
	1200	70	77	82	77	73	67	64	59	65
5000	400	59	66	71	66	62	56	53	48	54
	800	64	71	76	71	67	61	58	53	59
	1200	69	76	81	76	72	66	63	58	63
6000	400	62	69	74	69	65	59	56	51	57
	800	65	72	77	72	68	62	59	54	60
	1200	68	75	80	76	72	66	63	58	63
	1600	71	78	83	79	75	69	66	61	66
7000	400	65	72	77	72	68	62	59	54	60
	800	66	73	78	74	70	64	61	56	61
	1200	69	76	81	76	72	66	63	58	64

Airflow (m³/h)	Total Pressure (Pa)	Sound power levels at inlet (Lw(A)) Frequency (Hz) 63	125	250	500	1000	2000	4000	8000	Lp(A) @3m dB(A)
3000	400	47	59	67	70	72	73	68	65	58
	800	56	68	76	79	81	82	77	74	67
	1200	61	73	81	83	85	86	81	78	71
5000	400	50	62	70	72	74	75	70	67	60
	800	55	67	75	77	79	80	75	72	65
	1200	60	72	80	82	84	85	80	77	70
6000	400	53	65	73	75	77	78	73	70	63
	800	56	68	76	78	80	81	76	73	66
	1200	59	71	79	82	84	85	80	77	70
	1600	62	74	82	85	87	88	83	80	73
7000	400	56	68	76	78	80	81	76	73	66
	800	57	69	77	80	82	83	78	75	68
	1200	60	72	80	82	84	85	80	77	70

Airflow (m³/h)	Total Pressure (Pa)	Sound power levels at inlet (Lw(A)) Frequency (Hz) 63	125	250	500	1000	2000	4000	8000	Lp(A) @3m dB(A)
3000	400	43	47	54	49	55	55	50	46	41
	800	52	56	63	58	64	64	59	55	50
	1200	57	61	68	63	69	69	64	60	54
5000	400	46	50	57	51	57	57	52	48	43
	800	51	55	62	56	62	62	57	53	48
	1200	56	60	67	61	67	67	62	58	53
6000	400	49	53	60	54	60	60	55	51	46
	800	52	56	63	57	63	63	58	54	49
	1200	55	59	66	61	67	67	62	58	53
	1600	58	62	69	64	70	70	65	61	56
7000	400	52	56	63	57	63	63	58	54	49
	800	53	57	64	59	65	65	60	56	51
	1200	56	60	67	61	67	67	62	58	53

THERMAL CHARACTERISTICS - UTBS 8 PRO-REG

2-row heating coil									
Airflow (m³/h)		4000 (m³/h)				6000 (m³/h)			
Water T. (ºC)	Ext. T. (ºC)	Power (kW)	Output T. (ºC)	Water flow (l/s)	Water pressure drop (kPa)	Power (kW)	Output T. (ºC)	Water flow (l/s)	Water pressure drop (kPa)
80/60	-10	58,4	33,8	0,70	5,9	77,0	28,5	0,92	9,8
	-5	55,0	36,3	0,66	5,3	72,5	31,2	0,87	8,8
	0	51,5	38,7	0,62	4,7	68,0	34,0	0,81	7,8
	5	48,0	41,0	0,57	4,1	63,3	36,6	0,75	6,8
	10	44,4	43,3	0,53	3,6	58,5	39,2	0,70	5,9
50/45	-10	41,0	20,7	1,96	42,7	54,1	17,0	2,60	70,8
	-5	37,7	23,3	1,80	36,6	49,8	19,9	2,38	60,9
	0	34,3	25,8	1,64	30,8	45,3	22,7	2,17	51,3
	5	30,9	28,2	1,48	25,4	40,8	25,4	1,95	42,3
	10	27,4	30,5	1,31	20,4	36,2	28,1	1,73	33,9

4-row heating coil									
Airflow (m³/h)		4000 (m³/h)				6000 (m³/h)			
Water T. (ºC)	Ext. T. (ºC)	Power (kW)	Output T. (ºC)	Water flow (l/s)	Water pressure drop (kPa)	Power (kW)	Output T. (ºC)	Water flow (l/s)	Water pressure drop (kPa)
80/60	-10	86,4	54,8	1,03	4,7	118,5	49,2	1,41	8,4
	-5	81,4	56,0	0,97	4,2	111,5	50,7	1,33	7,5
	0	76,2	57,2	0,91	3,7	104,5	52,2	1,25	6,7
	5	71,0	58,3	0,85	3,2	97,3	53,6	1,16	5,8
	10	65,7	59,3	0,79	2,8	89,0	55,0	1,07	5,0
50/45	-10	60,3	35,2	2,88	34,1	82,9	31,4	3,96	62,1
	-5	55,4	36,5	2,65	29,1	76,1	33,1	3,64	52,9
	0	50,3	37,8	2,41	24,3	69,3	34,6	3,31	44,3
	5	45,2	38,9	2,16	19,9	62,3	36,1	2,97	36,2
	10	40,1	40,0	1,92	15,9	55,1	37,5	2,63	28,8

4-row heating coil									
Airflow (m³/h)		4000 (m³/h)				6000 (m³/h)			
Water T. (ºC)	Ext. T. (ºC)	Power (kW)	Output T. (ºC)	Water flow (l/s)	Water pressure drop (kPa)	Power (kW)	Output T. (ºC)	Water flow (l/s)	Water pressure drop (kPa)
7/12	25 / 50%	13,3	16 / 84%	0,6	1,9	19,5	16,3 / 81,2%	0,93	4,1
	27 / 50%	19,5	15,9 / 86,5%	0,93	4,0	27,2	16,7 / 82,7%	1,30	7,9
	32 / 50%	36,0	16,5 / 88,1%	1,72	13,8	48,2	17,9 / 84,2%	2,31	24,8

6-row heating coil									
Airflow (m³/h)		4000 (m³/h)				6000 (m³/h)			
Water T. (ºC)	Ext. T. (ºC)	Power (kW)	Output T. (ºC)	Water flow (l/s)	Water pressure drop (kPa)	Power (kW)	Output T. (ºC)	Water flow (l/s)	Water pressure drop (kPa)
7/12	25 / 50%	22,0	12,3 / 93,4%	1,05	6,7	30,4	13,2 / 90,3%	1,45	12,7
	27 / 50%	28,7	12,3 / 84,1%	1,37	11,4	39,2	13,4 / 91,0%	1,87	21,2
	32 / 50%	46,8	12,5 / 95,5%	2,24	30,2	64,8	13,8 / 92,7%	3,10	57,2

MAIN COMPONENTS

Versions with reversible water coils

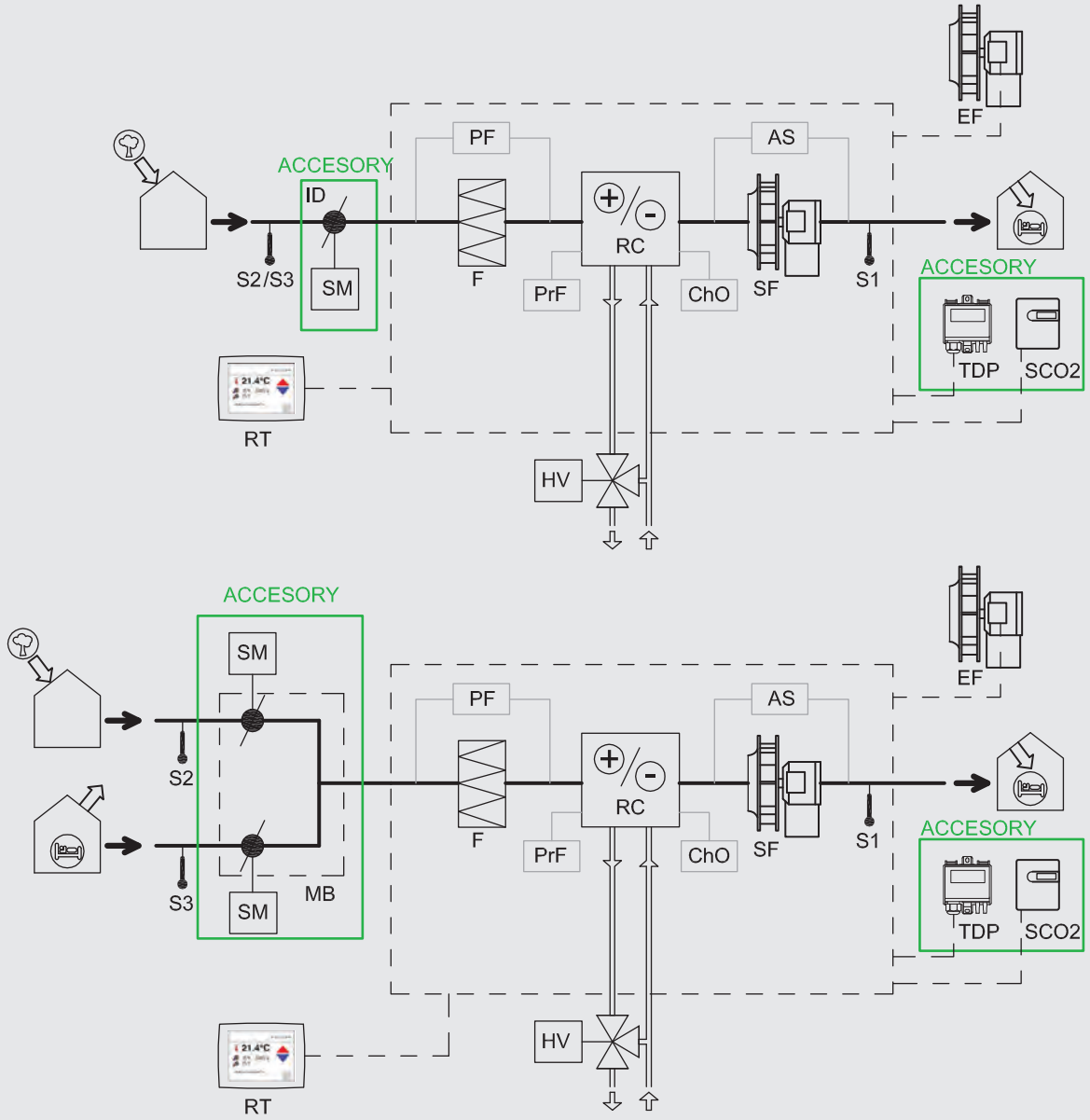

SF	Supply fan	AS	Air flow sensor	Cho	Change Over Thermostat (Accessory)
FCD	Filter clogging detector (Pressure switch)	RT	Remote hand terminal	PrF	Freeze protection
FFD	Fan failure detector (Pressure switch)	EF	External Fan (slave mode)	ID	Isolation Damper (Accessory)
S1	Supply air temperature probe	F	Filter	MB	Mixing box (Accessory)
S2	External air temperature probe	RC	Reversible coil	SM	Damper servo-motor (Accessory)
S3	Return air temperature probe	HV	Heating/cooling regulation valve	SCO2	CO2 Sensor (Accessory)
				TDP	Pressure transmiter TDP-S (Accessory)

MAIN COMPONENTS

Versions with hot water coil and/or chilled water coil

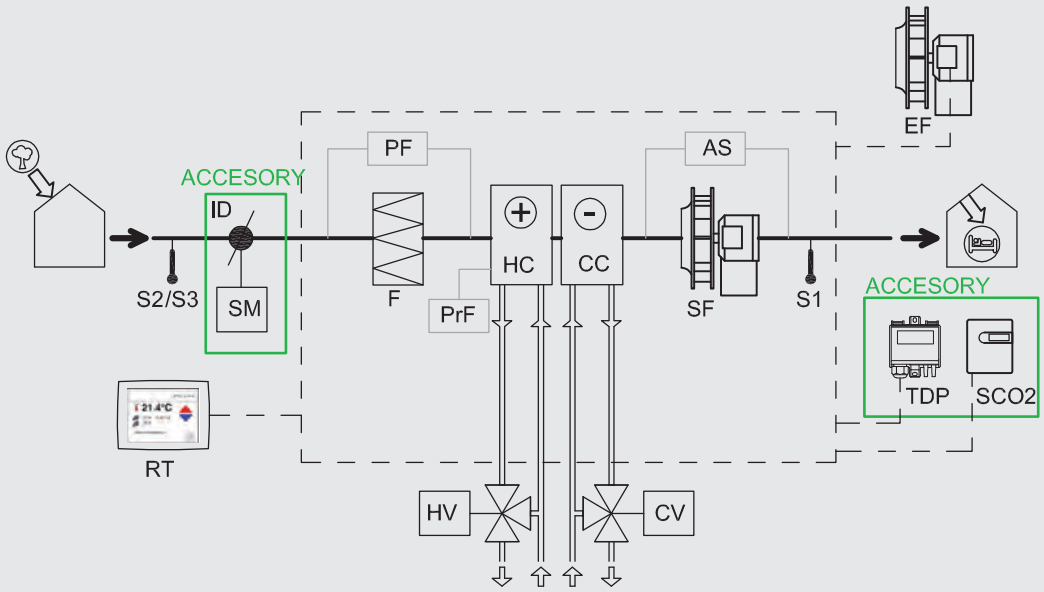

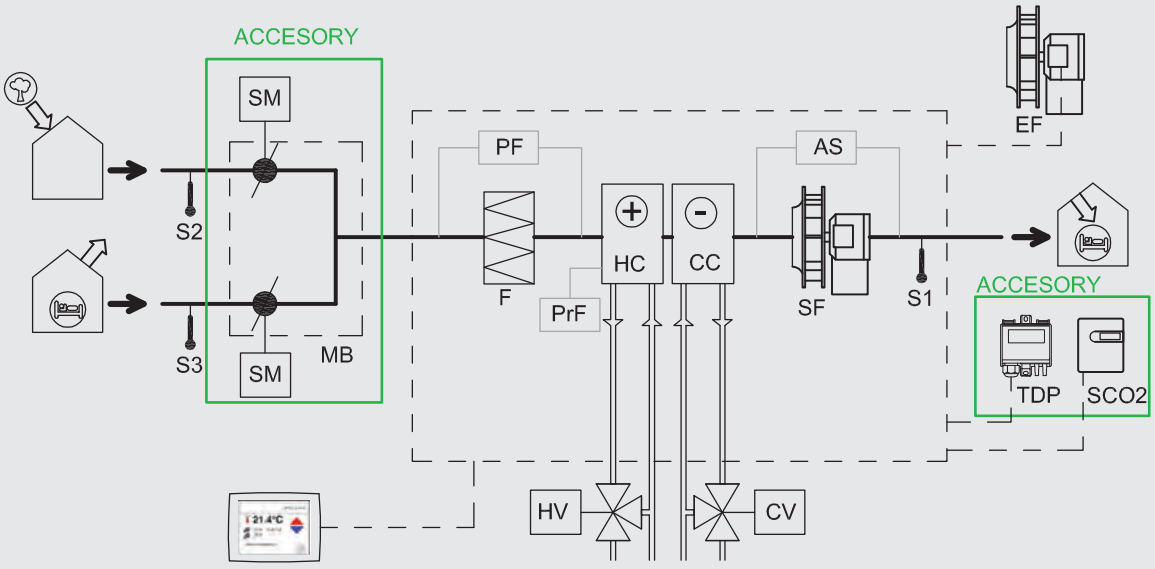

SF	Supply fan	RT	Remote hand terminal	CV	Cooling regulation valve
FCD	Filter clogging detector (Pressure switch)	EF	External Fan (slave mode)	PrF	Freeze protection
FFD	Fan failure detector (Pressure switch)	F	Filter	ID	Isolation Damper (Accessory)
S1	Supply air temperature probe	HC	Heating coil	MB	Mixing box (Accessory)
S2	External air temperature probe	CC	Cooling coil	SM	Damper servo-motor (Accessory)
S3	Return air temperature probe	HV	Heating regulation valve	SCO2	CO2 Sensor (Accessory)
AS	Air flow sensor			TDP	Pressure transmiter TDP-S (Accessory)

MAIN COMPONENTS

Versions with electric battery

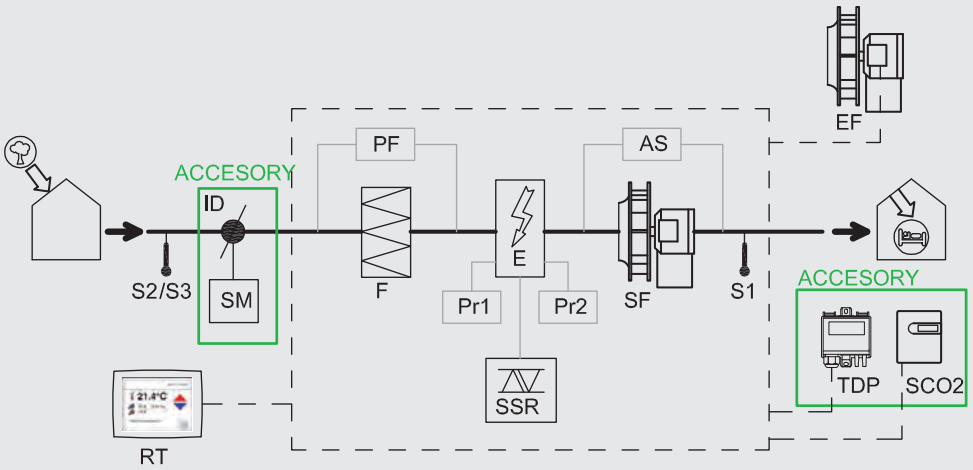

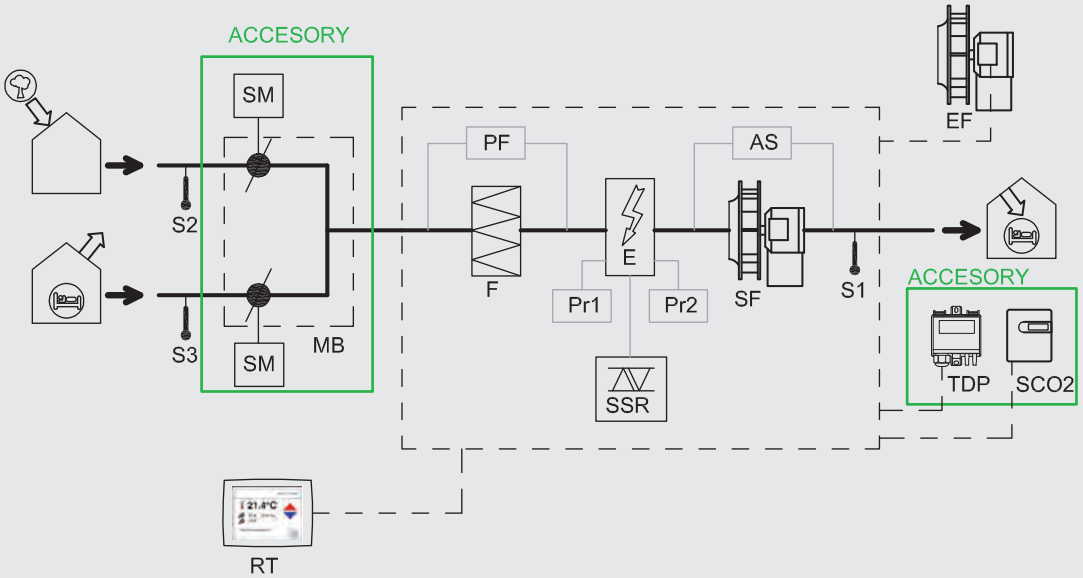

SF	Supply fan	FFD	Fan failure detector (Pressure switch)	Pr1/Pr2	Safety Thermostat (Manual/Auto)
SSR	Electrical heater regulator	FCD	Filter clogging detector (Pressure swich)	ID	Isolation Damper (Accessory)
E	Electrical heater	AS	Air flow sensor	MB	Mixing box (Accessory)
S1	Supply air temperature probe	RT	Remote hand terminal	SM	Damper servo-motor (Accessory)
S2	External air temperature probe	EF	External Fan (slave mode)	SCO2	CO2 Sensor (Accessory)
S3	Return air temperature probe	F	Filter	TDP	Pressure transmiter TDP-S (Accessory)

DIMENSIONS (mm)

Units without coils

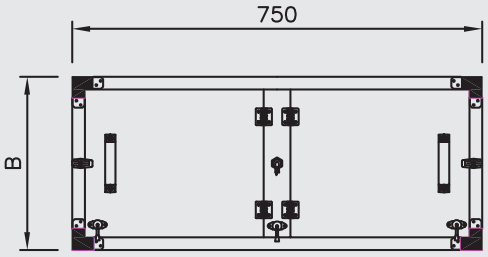

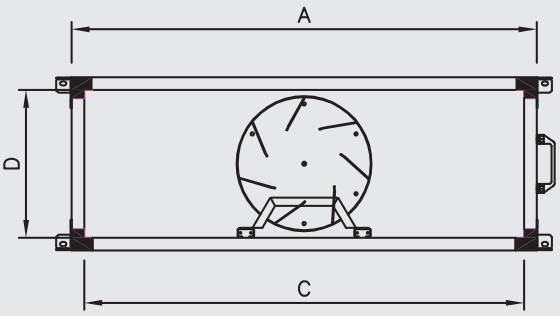

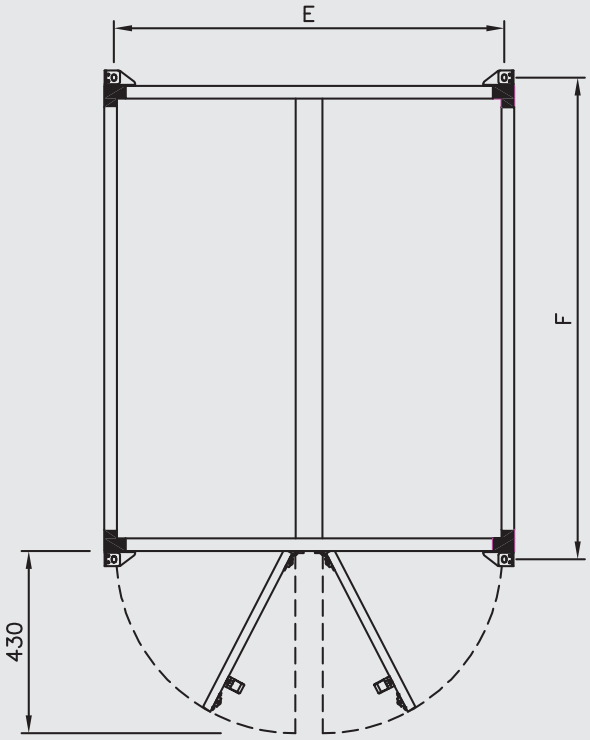

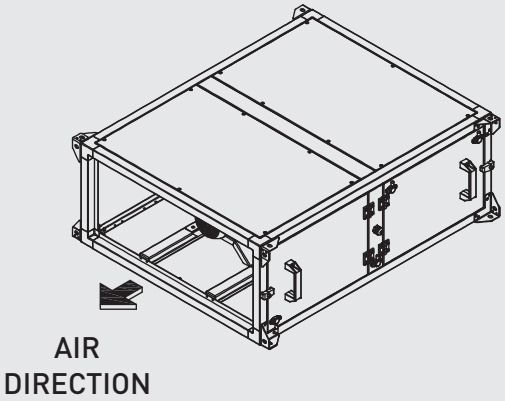

	External		Connections		Supports	
Model	**A**	**B**	**C**	**D**	**E**	**F**
UTBS-2	750	360	690	300	704	790
UTBS-3	1100	410	1040	350	704	1140
UTBS-5	1500	410	1440	350	704	1540
UTBS-8	1900	500	1840	440	704	1940

DIMENSIONS (mm)

Units exclusively with electrical battery

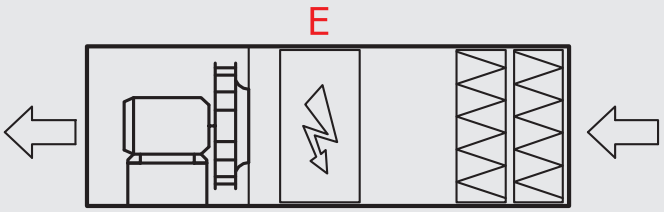

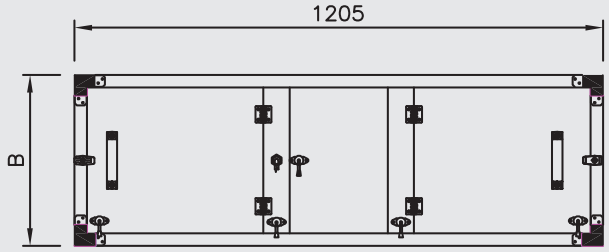

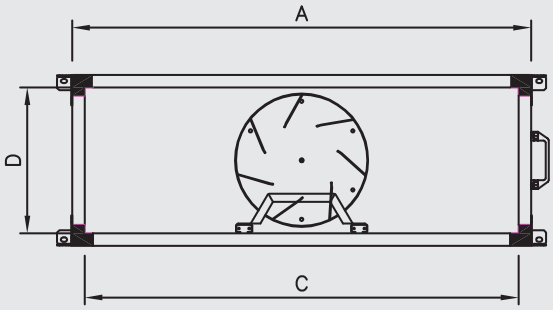

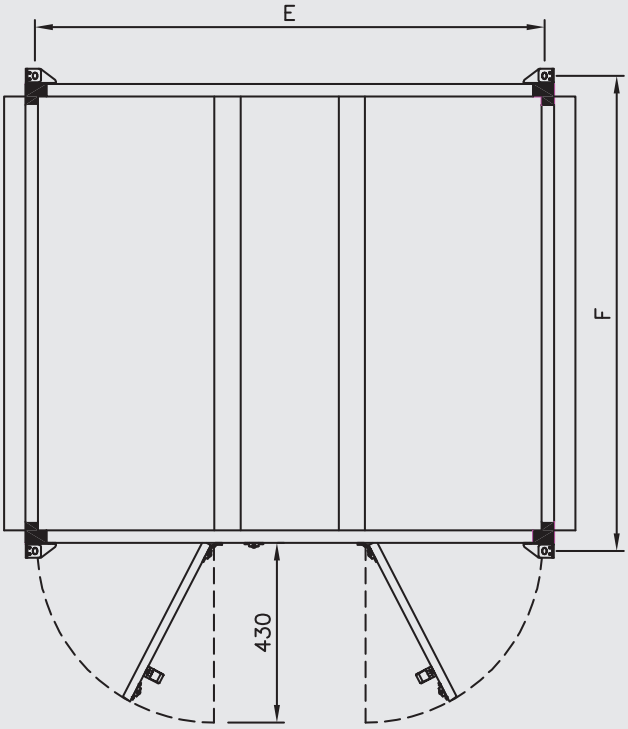

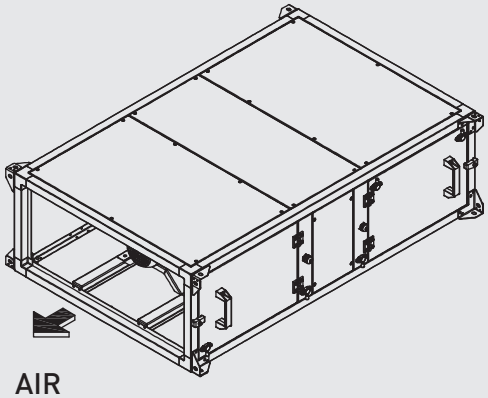

AIR DIRECTION

	External		Connections		Supports	
Model	**A**	**B**	**C**	**D**	**E**	**F**
UTBS-2	750	360	690	300	1159	790
UTBS-3	1100	410	1040	350	1159	1140
UTBS-5	1500	410	1440	350	1159	1540
UTBS-8	1900	500	1840	440	1159	1940

DIMENSIONS (mm)

Units with water / DX coils

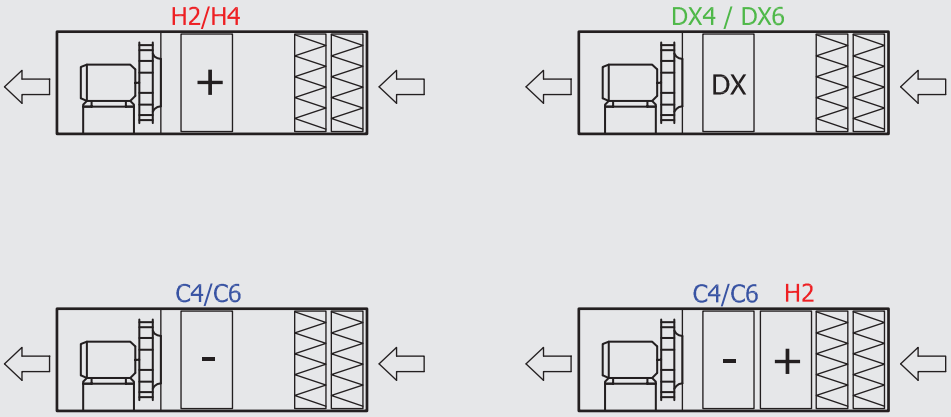

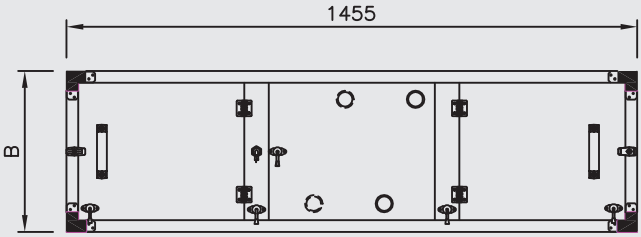

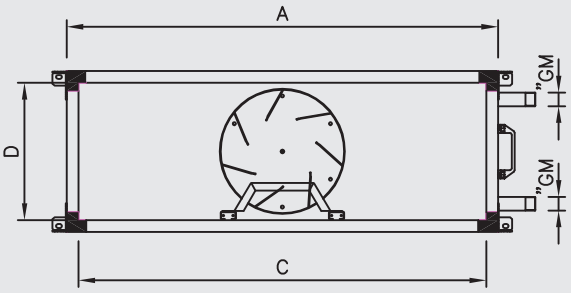

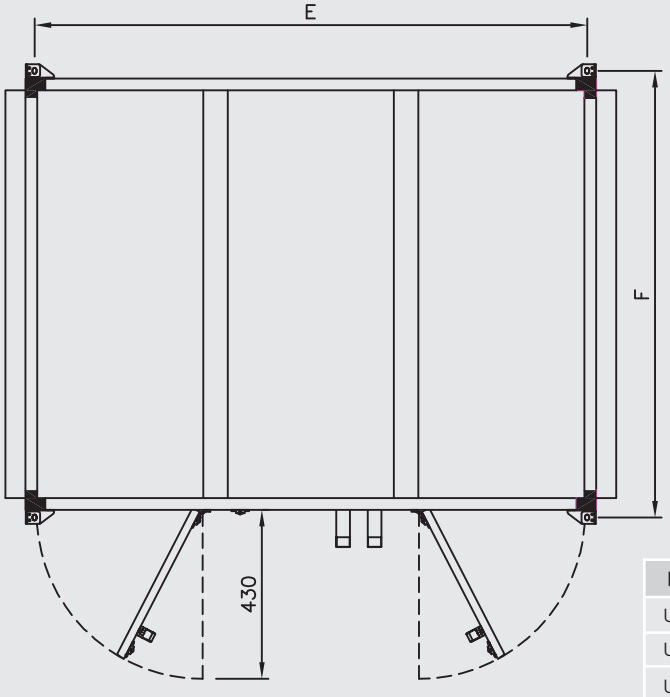

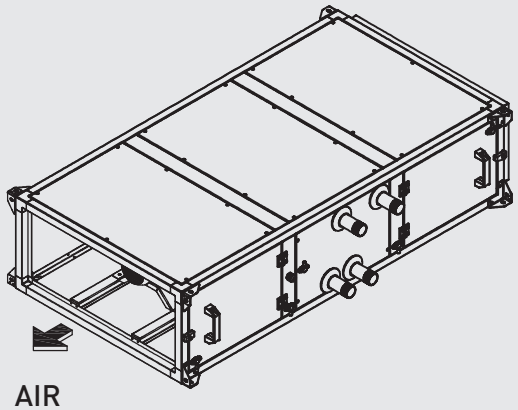

AIR DIRECTION

	External		Connections		Supports		Coil*
Model	**A**	**B**	**C**	**D**	**E**	**F**	**G**
UTBS-2	750	360	690	300	1409	790	1-1/4"
UTBS-3	1100	410	1040	350	1409	1140	1-1/4"
UTBS-5	1500	410	1440	350	1409	1540	1-1/4"
UTBS-8	1900	500	1840	440	1409	1940	1-1/4"

* Applies only to versions with water coils

REFERENCE

Main box

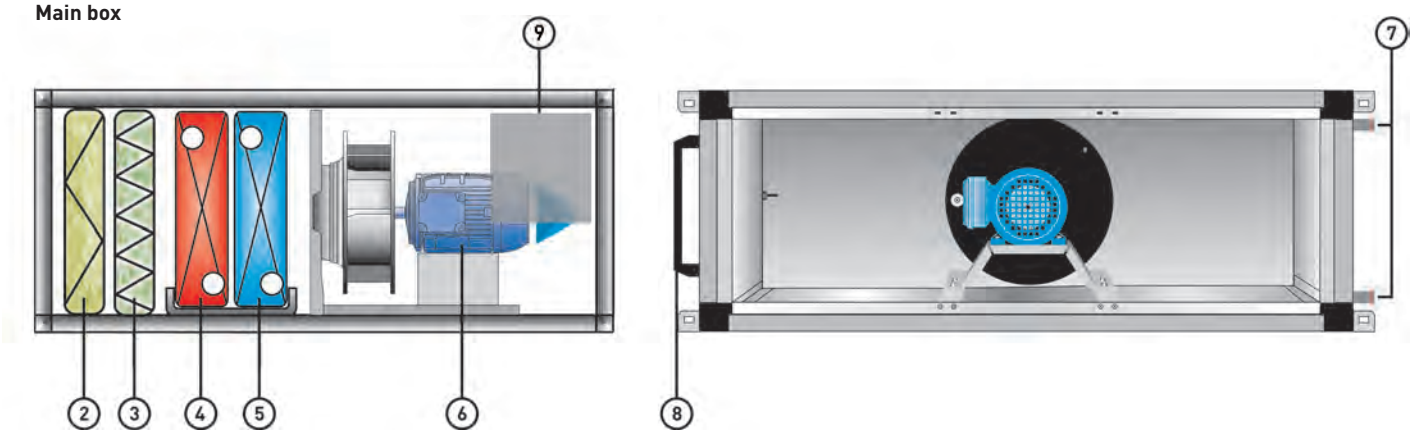

U	T	B	S	-	5	P	F7	E	0,75	kW	R	PRO-REG
1						2	3	4	5		6	7

1. SIZE

UTBS-2
UTBS-3
UTBS-5
UTBS-8

2. PRE-FILTERS

Without prefilter. Available space to mount a filter as accessory.

3. FILTERS

F7: Filter F7

4. COIL STAGE

E: Electric battery
H2: 2-row hot water coil
H4: 4-row hot water coil
C4: 4-row cold water coil
C6: 6-row cold water coil
X4: 4-row direct expansion coil
X6: 6-row direct expansion coil
C4 H2: 4-row cold water coil + 2-row hot water coil
C6 H2: 6-row cold water coil + 2-row hot water coil
Ø: Without coil

5. MOTOR POWER

0,55 kW for UTBS-2 (1 fan)
0,75 kW for UTBS-3 (1 fan)
0,75 kW for UTBS-5 (2 fans)
1,1 kW for UTBS-8 (2 fans)

6. CONNECTIONS AND ACCESS SIDE

R: Access doors and connections on the right
L: Access doors and connections on the left

7. CONTROL TYPE

PRO-REG: Advanced Plug&play controller

CHARACTERISTIC CURVES - UTBS 2

- q_v: Airflow in m³/h.
- p_{sf}: Static pressure in Pa.
- Pabs: Absorbed power at maximum speed (W).
- Dry air at 20ºC and 760 mmHg.
- Performance data in accordance with ISO 5801 and AMCA 210-99 Standards.

UTBS-2 F7 E 0,55kW

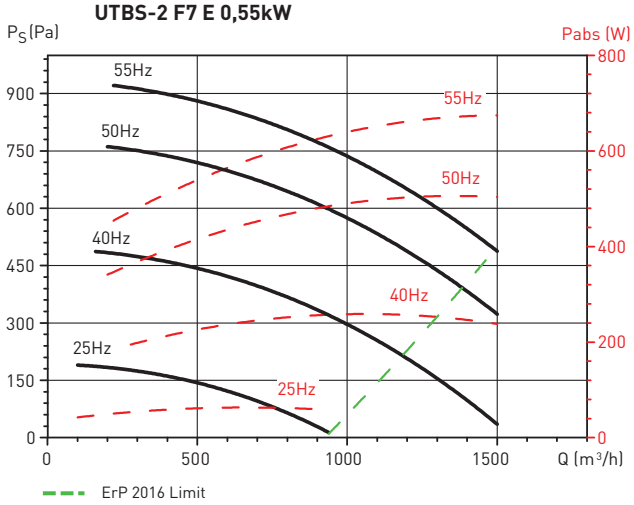

UTBS-2 F7 H2 0,55kW

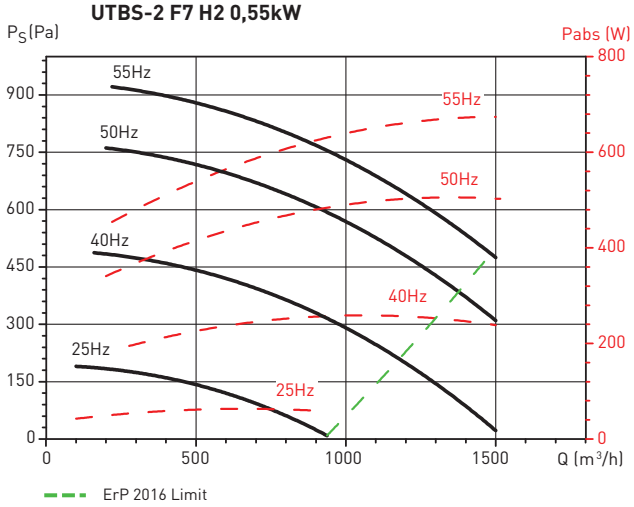

UTBS-2 F7 H4 0,55kW
UTBS-2 F7 C4 0,55kW

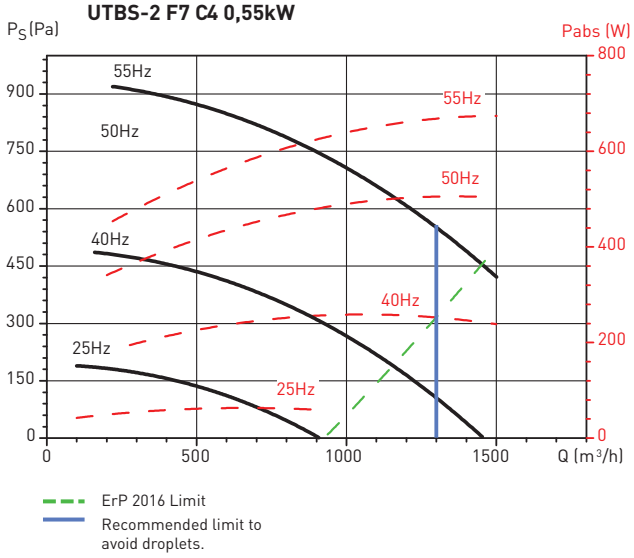

UTBS-2 F7 C6 0,55kW

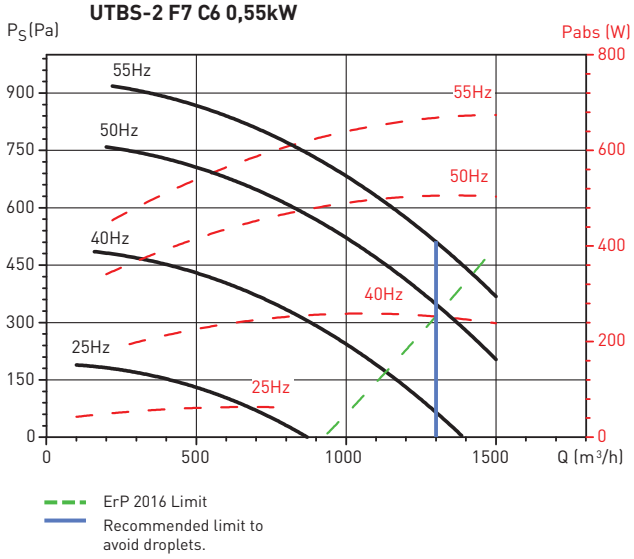

UTBS-2 F7 C4 H2 0,55kW

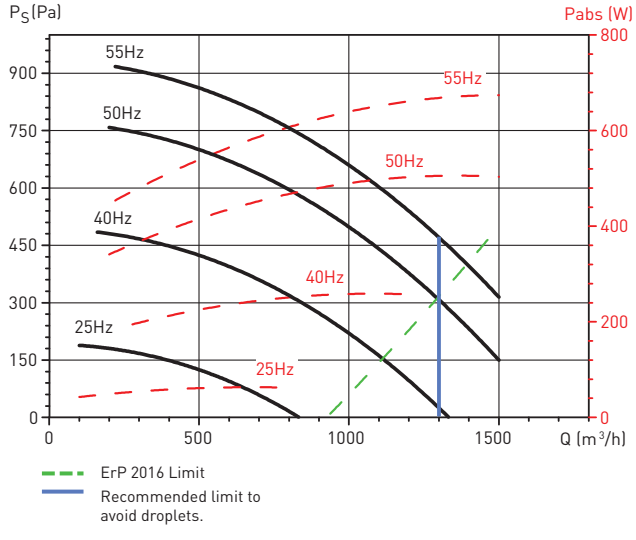

UTBS-2 F7 C6 H2 0,55kW

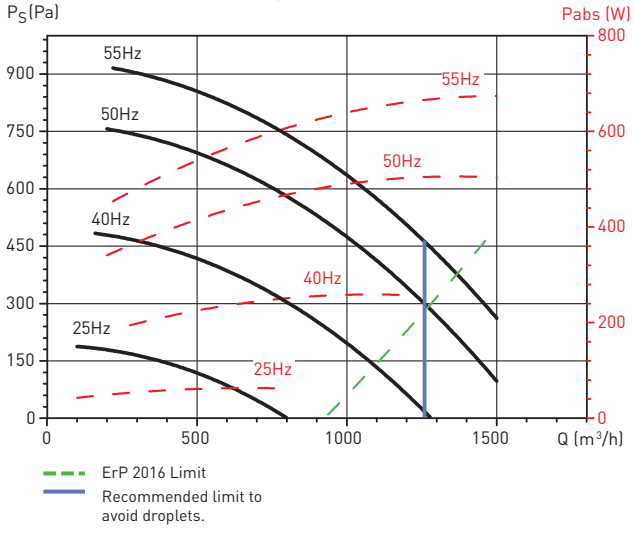

CHARACTERISTIC CURVES - UTBS 3

- q_v: Airflow in m^3/h.
- p_{sf}: Static pressure in Pa.
- Pabs: Absorbed power at maximum speed (W).
- Dry air at 20ºC and 760 mmHg.
- Performance data in accordance with ISO 5801 and AMCA 210-99 Standards.

UTBS-3 F7 E 0,75kW

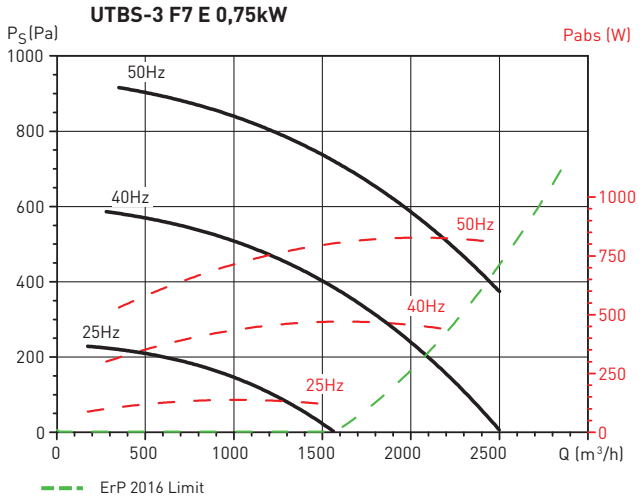

UTBS-3 F7 H2 0,75kW

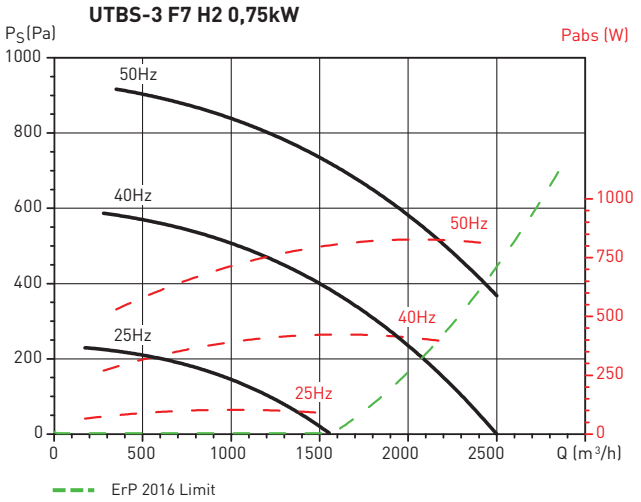

UTBS-3 F7 H4 0,75kW
UTBS-3 F7 C4 0,75kW

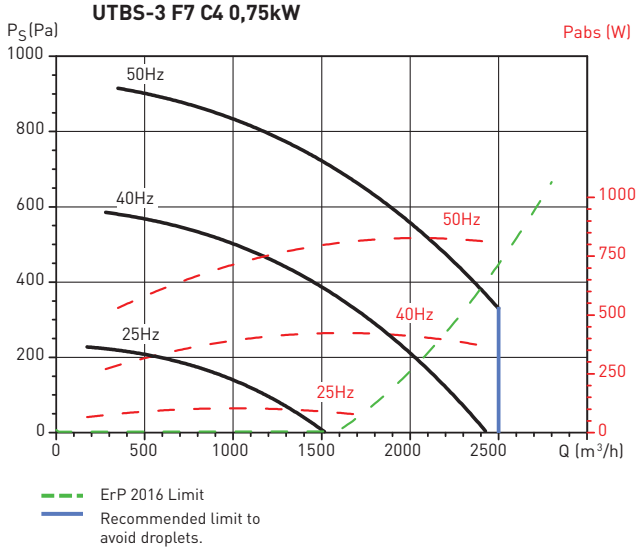

UTBS-3 F7 C6 0,75kW

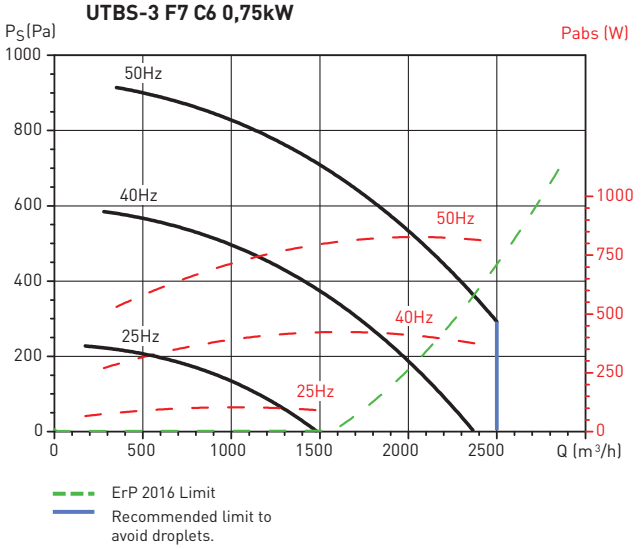

UTBS-3 F7 C4 H2 0,75kW

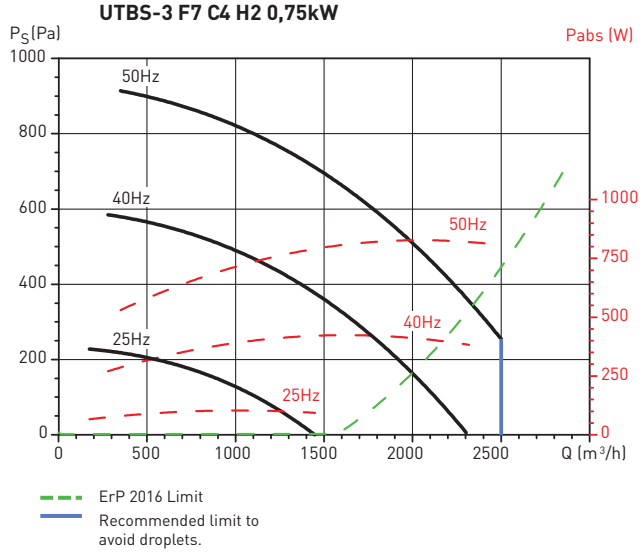

UTBS-3 F7 C6 H2 0,75kW

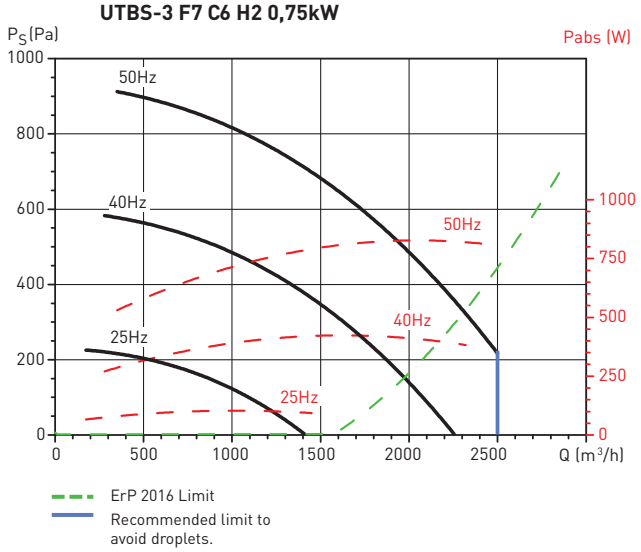

CHARACTERISTIC CURVES - UTBS 5

- q_v: Airflow in m³/h.
- p_{sf}: Static pressure in Pa.
- Pabs: Absorbed power at maximum speed (W).
- Dry air at 20ºC and 760 mmHg.
- Performance data in accordance with ISO 5801 and AMCA 210-99 Standards.

UTBS-5 F7 E 0,75kW

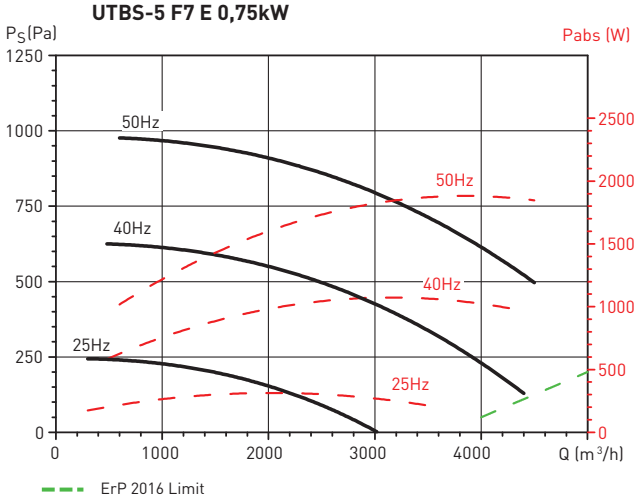

UTBS-5 F7 H2 0,75kW

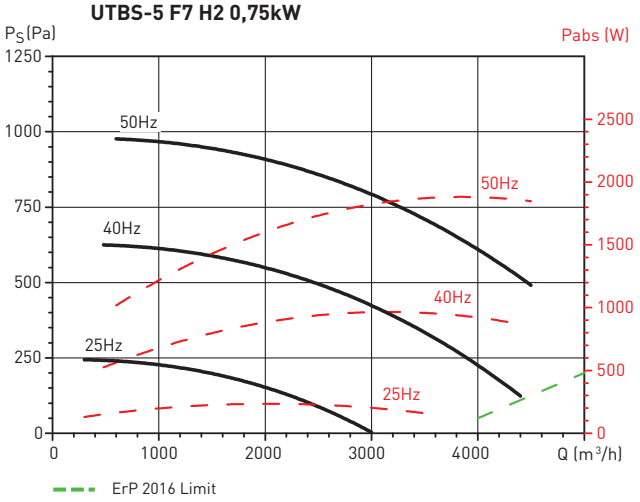

UTBS-5 F7 H4 0,75kW
UTBS-5 F7 C4 0,75kW

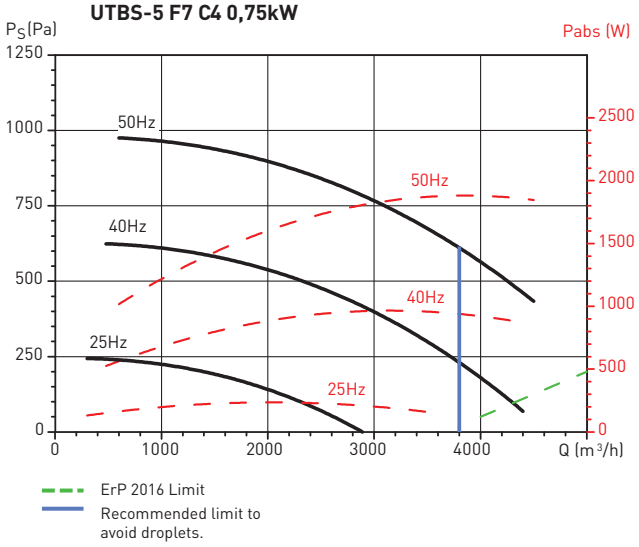

UTBS-5 F7 C6 0,75kW

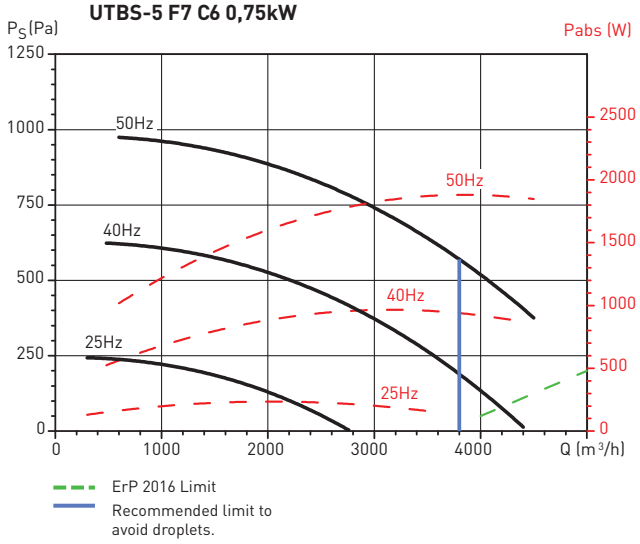

UTBS-5 F7 C4 H2 0,75kW

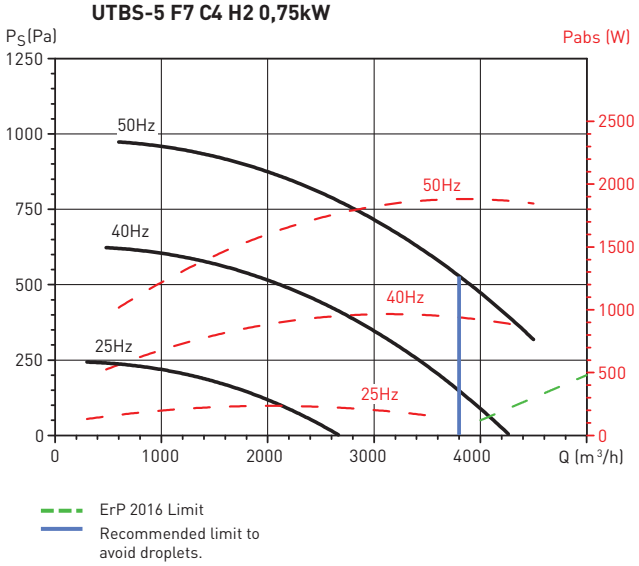

UTBS-5 F7 C6 H2 0,75kW

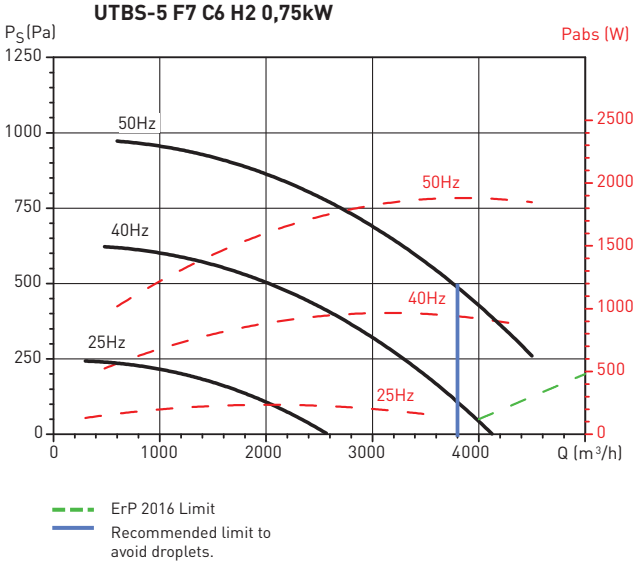

CHARACTERISTIC CURVES - UTBS 8

- q_v: Airflow in m³/h.
- p_{sf}: Static pressure in Pa.
- Pabs: Absorbed power at maximum speed (W).
- Dry air at 20ºC and 760 mmHg.
- Performance data in accordance with ISO 5801 and AMCA 210-99 Standards.

UTBS-8 F7 E 1,1kW

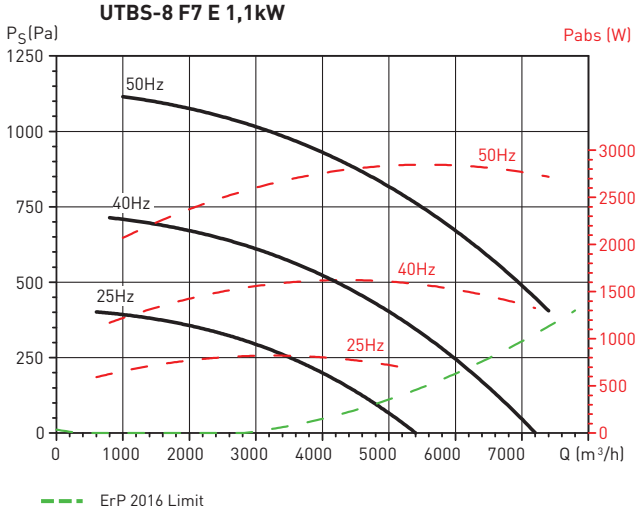

UTBS-8 F7 H2 1,1kW

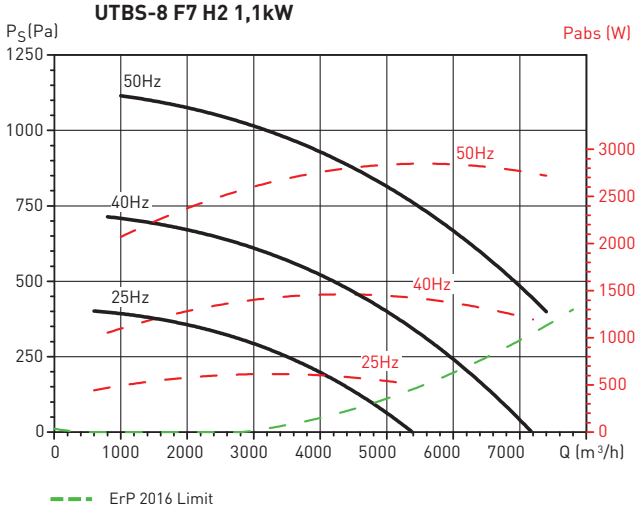

UTBS-8 F7 H4 1,1kW
UTBS-8 F7 C4 1,1kW

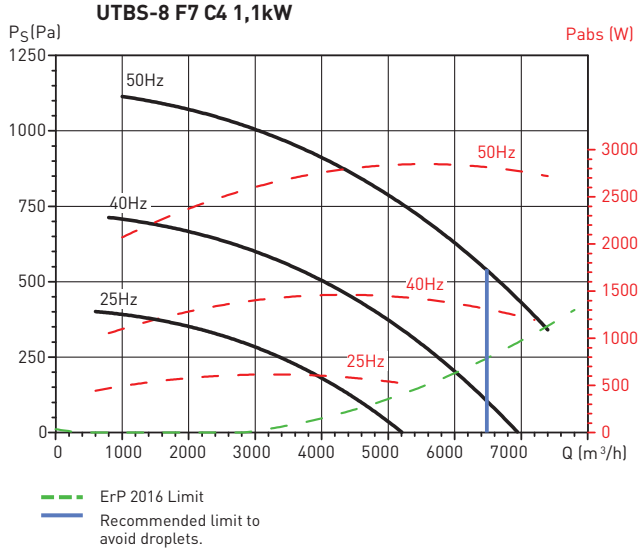

UTBS-8 F7 C6 1,1kW

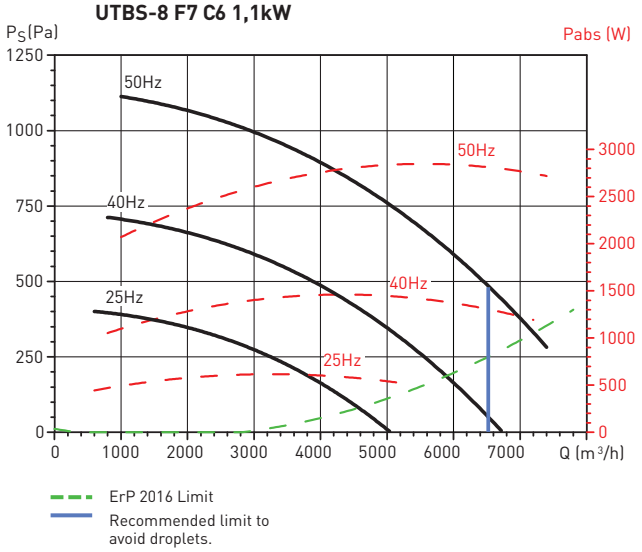

UTBS-8 F7 C4 H2 1,1kW

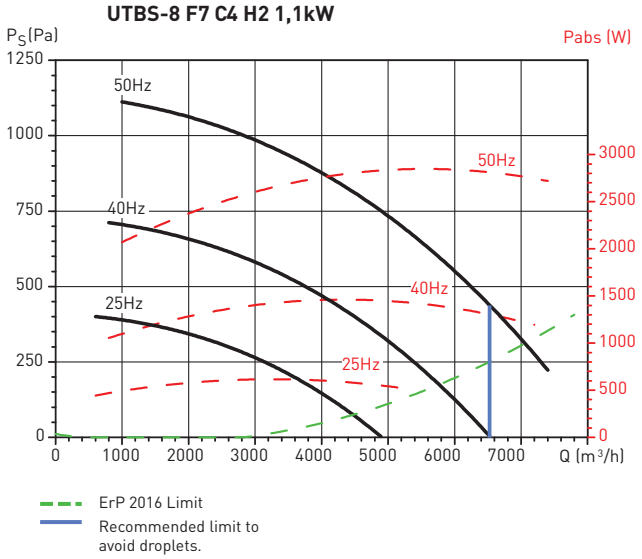

UTBS-8 F7 C6 H2 1,1kW

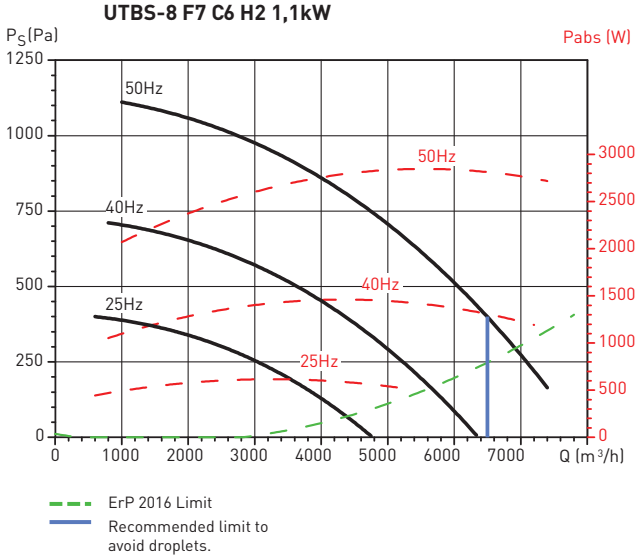

MOUNTING ACCESSORIES

Installation with 100% fresh air

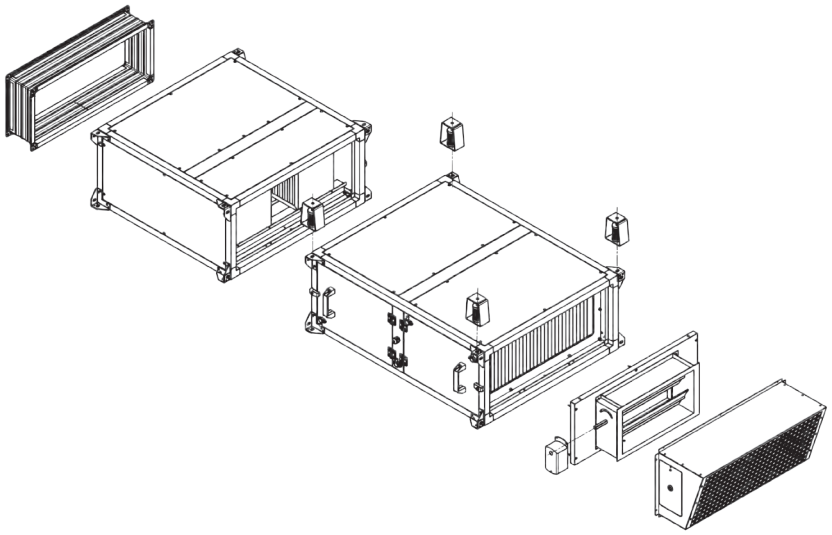

Model	Flexible connector	Sound attenuator	Antivibration support	Cover	Isolation damper module	Actuator 24V
UTBS-2	JF-UTBS 650x250	SIL-2 750	AMORTIGUADOR DE MUELLE TM-50	VF UTBS-2	ID KIT COMP. UTBS-2	LF 24 S
UTBS-3	JF-UTBS 1000x300	SIL-3 750	AMORTIGUADOR DE MUELLE TM-50	VF UTBS-3	ID KIT COMP. UTBS-3	
UTBS-5	JF-UTBS 1400x300	SIL-5 750	AMORTIGUADOR DE MUELLE TM-75	VF UTBS-5	ID KIT COMP. UTBS-5	
UTBS-8	JF-UTBS 1800x400	SIL-8 750	AMORTIGUADOR DE MUELLE TM-100	VF UTBS-8	ID KIT COMP. UTBS-8	

Installation with mixing module

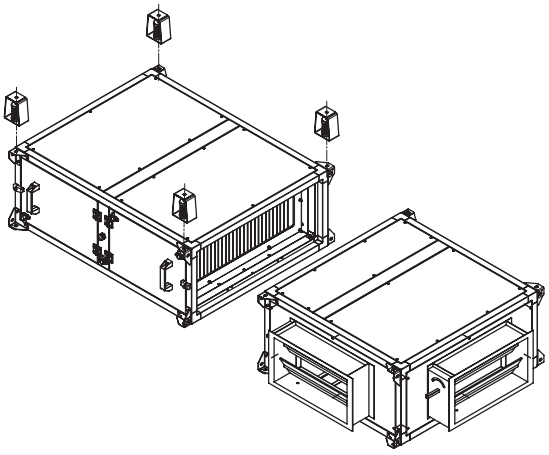

Modelo	Antivibrator pads	Mixing box (2 rails)		Actuator 24V
		Front and lateral damper	Lateral dampers	
UTBS-2	AMORTIGUADOR DE MUELLE TM-50	2MB-2	2MD-2	SM-24/PRO (2 units)
UTBS-3	AMORTIGUADOR DE MUELLE TM-50	2MB-3	2MD-3	
UTBS-5	AMORTIGUADOR DE MUELLE TM-75	2MB-5	2MD-5	
UTBS-8	AMORTIGUADOR DE MUELLE TM-100	2MB-8	2MD-8	

MOUNTING ACCESSORIES

Mounting accessories made from galvanized steel (without painting)

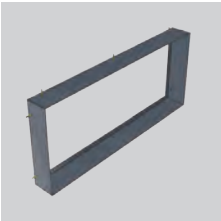

BR-UTBS-2
BR-UTBS-8
Rectangular flange to be mounted in inlet and/or outlet side

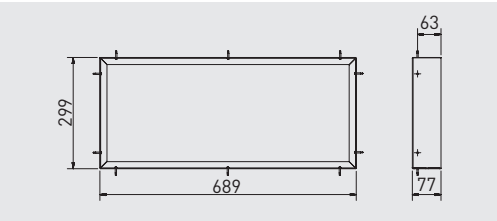

Model	A (mm)	B (mm)
UTBS-2	688	299
UTBS-3	1038	348
UTBS-5	1438	348
UTBS-8	1838	438

ID Isolating damper
Accessory including one regulating damper that can be mounted in the inlet or outlet side of main box.

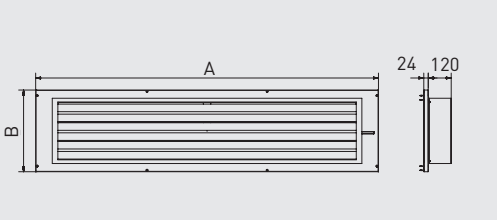

Model	A (mm)	B (mm)
ID KIT UTBS 2	688	298
ID KIT UTBS 3	1038	348
ID KIT UTBS 5	1438	348
ID KIT UTBS 8	1838	438

Flexible connections JF

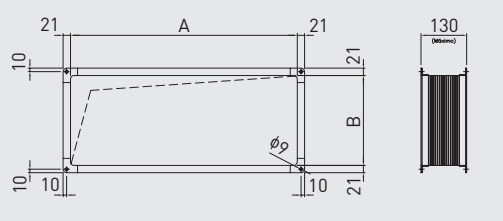

Model	A (mm)	B (mm)	Peso (kg)
JF-UTBS 650x250	646	256	3
JF-UTBS 1000x300	996	306	4
JF-UTBS 1400x300	1396	306	5
JF-UTBS 1800x400	1796	396	6

Antivibration supports

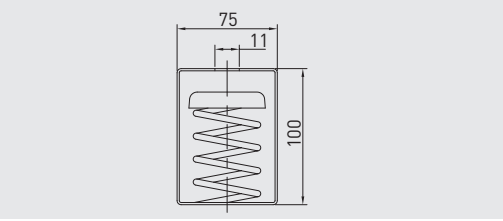

Model	Quantity for UTBS	Nominal load (kg.)	Displa-cement (mm.)
AMORTIGUADOR DE MUELLE TM-50	646	256	3
AMORTIGUADOR DE MUELLE TM-750	996	306	4
AMORTIGUADOR DE MUELLE TM-100	1396	306	5

SIL-UTBS
Sound attenuator

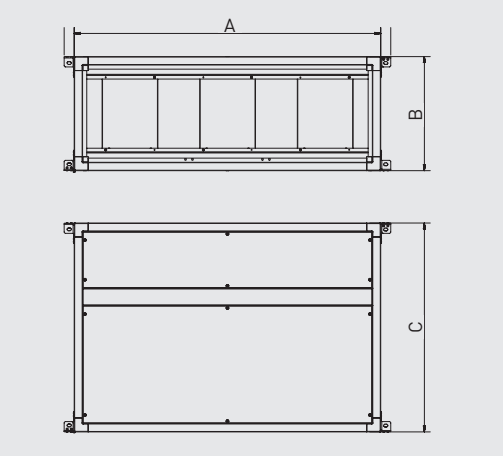

Model	A (mm)	B (mm)	C (mm)	Weight (kg)
SIL-2 750 1C	750	360	750	39
SIL-3 750 1C	750	410	750	53
SIL-5 750 1C	750	410	750	65
SIL-8 750 1C	750	500	750	87

Sound attenuators pressure drop

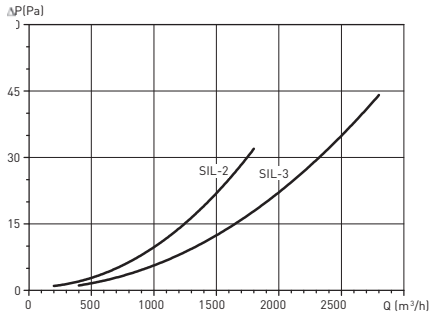

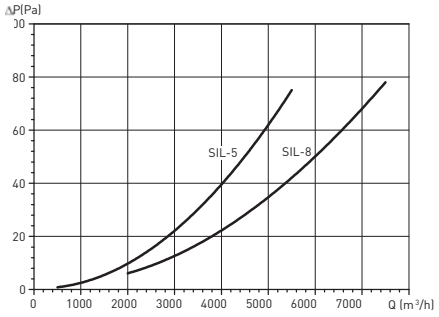

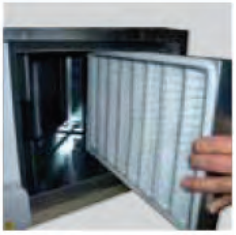

AFR spare filter

G4	F5	F7	F9	Qty.	Dimensions
AFR UTBS-2 G4	AFR UTBS-2 F5	AFR UTBS-2 F7	AFR UTBS-2 F9	1	645x250x48
AFR UTBS-3 G4	AFR UTBS-3 F5	AFR UTBS-3 F7	AFR UTBS-3 F9	1	995x300x48
AFR UTBS-5 G4	AFR UTBS-5 F5	AFR UTBS-5 F7	AFR UTBS-5 F9	2	695x300x48
AFR UTBS-8 G4	AFR UTBS-8 F5	AFR UTBS-8 F7	AFR UTBS-8 F9	2	895x380x48

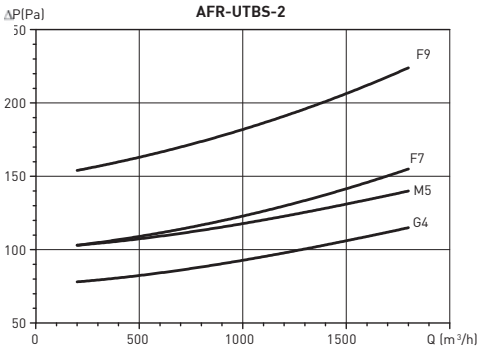

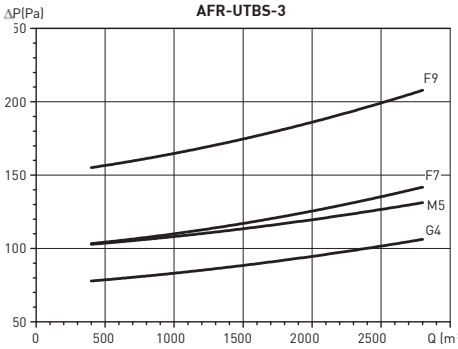

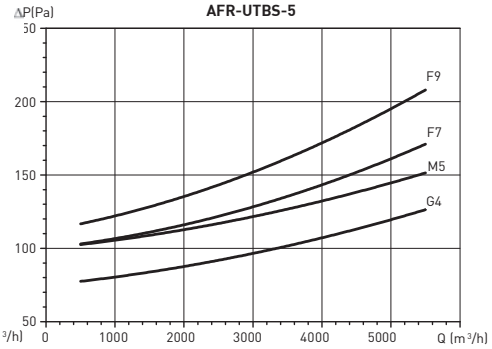

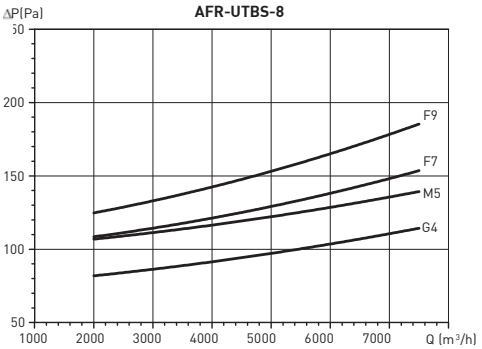

MOUNTING ACCESSORIES

Mixing box (2M)

Mixing module with two dampers.
The dampers can be activated manually or with servo motor.

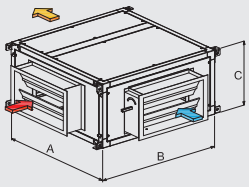

Front damper
+ side damper
Ref: 2MB

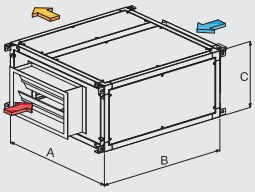

Opposite side dampers
Ref: 2MD

UTBS PRO-REG Model	Mixing Module		Actuator
	Front damper + side damper	Opposite side dampers	24V
2	2MB-2	2MD-2	SM-24/PRO (2 units)
3	2MB-3	2MD-3	
5	2MB-5	2MD-5	
8	2MB-8	2MD-8	

2MB: Front damper + side damper

Model	A (mm.)	B (mm.)	C (mm.)	Lateral damper	Front damper	Weight (kg.)
				L1xH1 (mm.)	L2xH2 (mm.)	
UTBS-2	750	360	750	400x210	400x210	39
UTBS-3	1100	410	750	450x310	800x210	52
UTBS-5	1500	410	1205	750x310	1200x210	106
UTBS-8	1900	500	1250	900x410	1600x310	137

DAMPERS

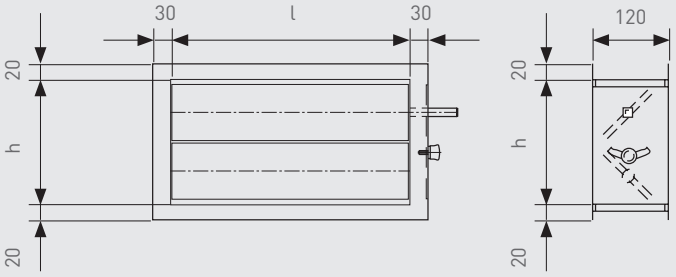

l= Damper width
h= Damper heigth

2MD: Front damper + side damper

Model	A (mm.)	B (mm.)	C (mm.)	Lateral damper	Weight (kg.)
				LxH (mm.)	
UTBS-2	750	360	750	400x210	39
UTBS-3	1100	410	750	450x310	52
UTBS-5	1500	410	1205	750x310	106
UTBS-8	1900	500	1250	900x410	137

ELECTRIC ACCESSORIES

Control type	Accessory
VAV	SCO2-A 0/10V / SCO2-G 0/10V
CAV	Supplied with the unit
COP	TDP-S

Sonda TDP-S
Pressure sensor, without display.
Enables you to control the pressure in the fan inlet.

SCO2-G 0/10V
CO_2 sensor for the duct.
Enables control of the ventilation in sections of duct according to the CO_2 concentration of the air circulating through it.
Output signal: 0-10V
Power supply: 24 VDC.

SCO2-A 0/10V
Ambient CO_2 and temperature sensor without display.
Output: 0-1 0V
Power supply: 24VDC

LF 24 S (AC 24V 50/60Hz/DC 24V)
Actuator with spring return motor. 4 Nm.
Control signal On/Off.

SM-24/PRO
Servo motor to control the mixing module dampers. Supply power 24V (proportional output 0-10V).

3-WAY VALVES WITH PROPORTIONAL ACTUATOR
Three way motorised control valve.
Pressure 1 6 bar.
Rp" internal nut.
Nickel-plated forged brass casing.
Stainless steel valve cone.
Stainless steel shaft.
Average temperatures -1 0..+1 20.
5Nm mounted rotary actuator.
AC/DC 24V, proportional.
90 s/90° valve response time.
DC 2....1 0V working range.
IP 54, automatic or manual activation.

Version wih electric heater

Version wih hot water coil

Introduction of fresh air to commercial offices and industrial kitchens.
Acoustic cabinet fan in galvanised sheet steel with reinforced insulation by:
- Double skin panels of 50mm. Rockwood insulated.
- Density 40 kg/m^3.
- Fire rated A1 in accordance with EN 13 501-1 standard (non-flammable).

4 mounting feet.
In-line duct connection by circular flanges with integrated rubber seals.
G4 grade filter integrated inside the cabinet on slides.
(On request, F5 or F7 grade filters).
Safety protection on the access cover for application where the cabinet fan is fixed into the ceiling.
Direct drive backward Plug-fan with integrated EC motor. Impeller in galvanized steel.
Can be used indoors or outdoors with accessories.

Range
4 models with airflows from 80 to 4000 m^3/h.
Operation with complete electronic control.
5 versions:
- Electric heater (BRM, BRT).
- Hot water coil (BCR).
- Reversible water coil (BCFRR).
- Hot water coil + cold water coil (BCFR).
- Cold water coil (BFR).

Motors
- Direct drive Plug fans with EC motor.
- Single-phase or three-phase motor with thermal protection managed by electronics:
  - CAIB/T PRO-REG 08/18 : Single-phase 230V (200-277V), 50/60Hz, IP44, class B.
  - CAIB/T PRO-REG 28 : Single-phase 230V (200-277V), 50/60Hz, IP 54, class B.
  - CAIB/T PRO-REG 38 : Three-phase 400V (380-480V), 50/60Hz, IP 54, class B.

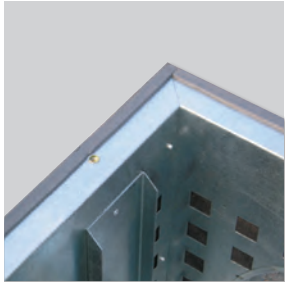

Airtight cabinet
Internally lined with 50 mm thickness fibre glass insulation (non-flammable).

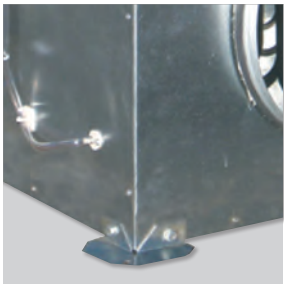

Easy to mount
4-fixing feet.

Stainless steel 304L electrical heaters.

Integrated electronic controller
Integrated electronic controller mounted on the cabinet.

PLUG & PLAY

Full controls package integrated

Specific applications

Commercial and industrial kitchens

Supermarket & convenience stores

VERSIONS FEATURES

Features of electric heater
- 304L stainless steel element rods.
- Safety thermostats: auto-reset thermostat at 75ºC / manual reset thermostat at 120ºC
- Proportional regulation by included SSR.

Features of hot water coil (Ranges BCR / BCFR / BCFRR)
- Water coil, of 3 rows of cupper pipes with aluminium fins, mounted in a galvanized sheet frame.
- Connection side on the right hand in the air flow sense.
- Antifreeze protection by contact probe.
- 3 way valve (24V) with proportional actuator (0-10V).
- The valve is delivered with the unit (not mounted)

Features of cold water coil (Ranges BFR / BCFR / BCFRR)
- Water coil, of 4 rows of cupper pipes with aluminium fins, mounted in a galvanized sheet frame.
- Connection side on the right hand in the air flow sense.
- Antifreeze protection by contact probe.
- Drain tray in stainless steel, and droplet separator.
- 3 way valve (24V) with proportional actuator (0-10V).
- The valve is delivered with the unit (not mounted)

REFERENCE

C	A	I	B	-	17	BR	T	PRO-REG
1					2	3	4	5

1 - Product range.
2 - Model / maximum airflow:
08: 1000 m³/h
18: 2000 m³/h
28: 3100 m³/h
38: 4000 m³/h

3 - Model variations.
BR: Cabinet fan with electric heater
BCR: Cabinet fan with hot water coil
BFR: Cabinet fan with cold water coil
BCFRR: Cabinet fan with reversible water coil
BCFR: Cabinet fan with hot water coil + cold water coil

4 - Power supply of the electric heater.
M: Single phase 230 V (only CAIB 08 model).
T: Three phase 400 V (all the other models).

5 - Controller Type.
PRO-REG: Advanced plug&play controller

TECHNICAL CHARACTERISTICS

Before installation check that the product electrical characteristics listed on the data plate label (voltage, power, frequency, etc.) match those of the intended electrical supply.

Electric battery (BRM, BRT)

	Complete unit					Fan		Electric heater	Weight (kg)
	Circular duct connection (mm.)	Maximum airflow (m^3/h)	Power supply	P. total (kW)	Max. Abs. Current (A)	RPM Max	P. abs. Max (W)	Heating power (kW)	
CAIB-08/250 BRM PRO-REG	250	1000	1/230V, 50Hz	6,5	28	2649	193	6	55
CAIT-08/250 BRT PRO-REG	250	1000	3+N/400V, 50Hz	10,5	15	2649	193	9	55
CAIT-18/355 BRT PRO-REG	355	2000	3+N/400V, 50Hz	16,6	23,9	2850	415	15	99
CAIT-28/400 BRT PRO-REG	400	3100	3+N/400V, 50Hz	26,5	38,2	2800	715	24	103
CAIT-38/400 BRT PRO-REG	400	4000	3+N/400V, 50Hz	31,5	45,4	2580	1000	30	112

Hot water coil (BCR)

	Complete unit					Fan		Water coil		Weight (kg)
	Circular duct connection (mm.)	Maximum airflow (m^3/h)	Power supply	P. total (kW)	Max. Abs. Current (A)	RPM Max	P. abs. Max (W)	Heating power (kW)	Cooling power (kW)	
CAIB-08/250 BCR PRO-REG	250	1000	1/230V, 50Hz	0,2	2,5	2649	193	6-13	-	58
CAIB-18/355 BCR PRO-REG	355	2000	1/230V, 50Hz	0,5	2,8	2850	415	10-23	-	104
CAIB-28/400 BCR PRO-REG	400	3100	1/230V, 50Hz	0,8	4,1	2800	715	14-30	-	115
CAIT-38/400 BCR PRO-REG	400	4000	3+N/400V, 50Hz	1,1	2,6	2580	1000	17-39	-	121

Cold water coil (BFR)

	Complete unit					Fan		Water coil		Weight (kg)
	Circular duct connection (mm.)	Maximum airflow (m^3/h)	Power supply	P. total (kW)	Max. Abs. Current (A)	RPM Max	P. abs. Max (W)	Heating power (kW)	Cooling power (kW)	
CAIB-08/250 BFR PRO-REG	250	1000	1/230V, 50Hz	0,2	2,5	2649	193	-	1,5-2,7	58
CAIB-18/355 BFR PRO-REG	355	2000	1/230V, 50Hz	0,5	2,8	2850	415	-	2,8-6,5	104
CAIB-28/400 BFR PRO-REG	400	3100	1/230V, 50Hz	0,8	4,1	2800	715	-	4-8	115
CAIT-38/400 BFR PRO-REG	400	4000	3+N/400V, 50Hz	1,1	2,6	2580	1000	-	5-8	121

Reversible water coil (BCFRR)

	Complete unit					Fan		Water coil		Weight (kg)
	Circular duct connection (mm.)	Maximum airflow (m^3/h)	Power supply	P. total (kW)	Max. Abs. Current (A)	RPM Max	P. abs. Max (W)	Heating power (kW)	Cooling power (kW)	
CAIB-08/250 BCFR PRO-REG	250	1000	1/230V, 50Hz	0,2	2,5	2649	193	6-13	1,5-2,7	67
CAIB-18/355 BCFR PRO-REG	355	2000	1/230V, 50Hz	0,5	2,8	2850	415	10-23	2,8-6,5	127
CAIB-28/400 BCFR PRO-REG	400	3100	1/230V, 50Hz	0,8	4,1	2800	715	14-30	4-8	131
CAIT-38/400 BCFR PRO-REG	400	4000	3+N/400V, 50Hz	1,1	2,6	2580	1000	17-39	5-8	140

Hot water coil + cold water coil (BCFR)

	Complete unit					Fan		Water coil		Weight (kg)
	Circular duct connection (mm.)	Maximum airflow (m^3/h)	Power supply	P. total (kW)	Max. Abs. Current (A)	RPM Max	P. abs. Max (W)	Heating power (kW)	Cooling power (kW)	
CAIB-08/250 BCFRR PRO-REG	250	1000	1/230V, 50Hz	1,8	2,5	2649	193	6-13	0,8-1,4	58
CAIB-18/355 BCFRR PRO-REG	355	2000	1/230V, 50Hz	2	2,8	2850	415	10-23	1,9-4,2	104
CAIB-28/400 BCFRR PRO-REG	400	3100	1/230V, 50Hz	2,9	4,1	2800	715	14-30	2,4-5,8	115
CAIT-38/400 BCFRR PRO-REG	400	4000	3+N/400V, 50Hz	1,9	2,6	2580	1000	17-39	2,8-7,8	121

TECHNICAL CHARACTERISTICS

	BR	BCR	BFR	BFCRR	BCFR
MAIN ELEMENTS					
Control Panel includes: General proximity switch over the electrical box	•	•	•	•	•
Terminal connexion and regulator inside the electrical box.	•	•	•	•	•
FUNCTIONALITIES					
Airflow adjustments					
Constant or fixed airflow (CAV mode), up to 2 different airflow configurations.	•	•	•	•	•
Adjustable airflow according to 0-10V external signal or via remote control.	•	•	•	•	•
Airflow management depending on time schedules (clock)	•	•	•	•	•
BOOST function via external contact	•	•	•	•	•
STOP function via external contact	•	•	•	•	•
Temperature regulation					
Temperature probe: Fresh air temperature probe	•	•	•	•	•
Supply air temperature probe	•	•	•	•	•
Water temperature probe installed on the coil		•	•	•	•
CHANGE OVER thermostat to be installed on the water supply coil				•	
Fresh air damper servomotor management (optional)	•	•	•	•	•
Battery regulation: Fresh air temperature probe TG/K3 PT1000	•	•	•	•	•
Supply temperature probe TG/K3 PT1000	•	•	•	•	•
Adjustments of internal electric batteries: Proportional regulation of the post-heating electrical battery power	•				
Regulation of internal water coil (or coils) 3V motorised damper- 0-10V proportional provided without mounting		•	•	•	•
Power adjustment by activating 3-way-damper		•	•	•	•
Room temperature probe TG-A1 PT1000		O	O	O	O
Defrost temperature probe PT1000		•	•	•	•
Security functions					
Cloged filters signal	•	•	•	•	•
Failure on the temperature probe	•	•	•	•	•
Fan failure	•	•	•	•	•
The setpoint cannot be achieved (airflow, pressure, temperature)	•	•	•	•	•
Fire alarm via contact related to a external fire detection system	•	•	•	•	•
Alarm of communication between the controller and the remote control	•	•	•	•	•
Frost risk control on the water coil (opening of the damper, fan stops when water temperature decreases below 7º in heating mode)		•		•	•
Alarm history	•	•	•	•	•
Communication					
Remote hand terminal	•	•	•	•	•
Adjustment communications: MODBUS RTU standard (RS485)	•	•	•	•	•
BACNET in TCP/IP port	•	•	•	•	•
Webserver application in TCP/IP port	•	•	•	•	•

•: Included O: Optional

CONTROL - SYNOPTHIC ELECTRICAL REGULATION

CAIB PRO-REG with electric coil

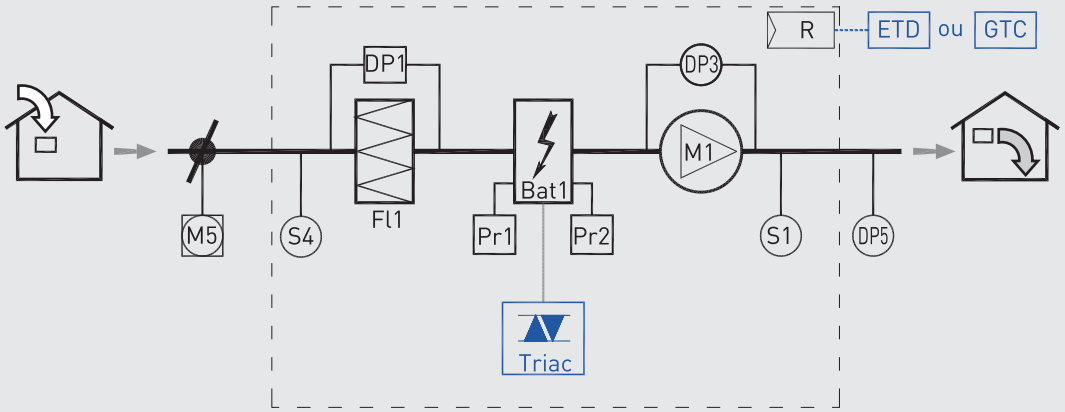

S1	Supply temperature probe	**M5**	Fresh air register	**DP5**	Pressure sensor (mode COP accessory)
S4	Fresh air temperature probe	**Fl1**	Fresh air filter	**Bat1**	Electric battery
R	Controller	**DP1**	Filter cloging detector	**Triac**	Electrical battery regulator
Pr1/2	Safety thermostat (man/auto)	**DP3**	Airflow sensor	**ETD**	Remote hand terminal
M1	Motor-fan				

CAIB PRO-REG with water coil

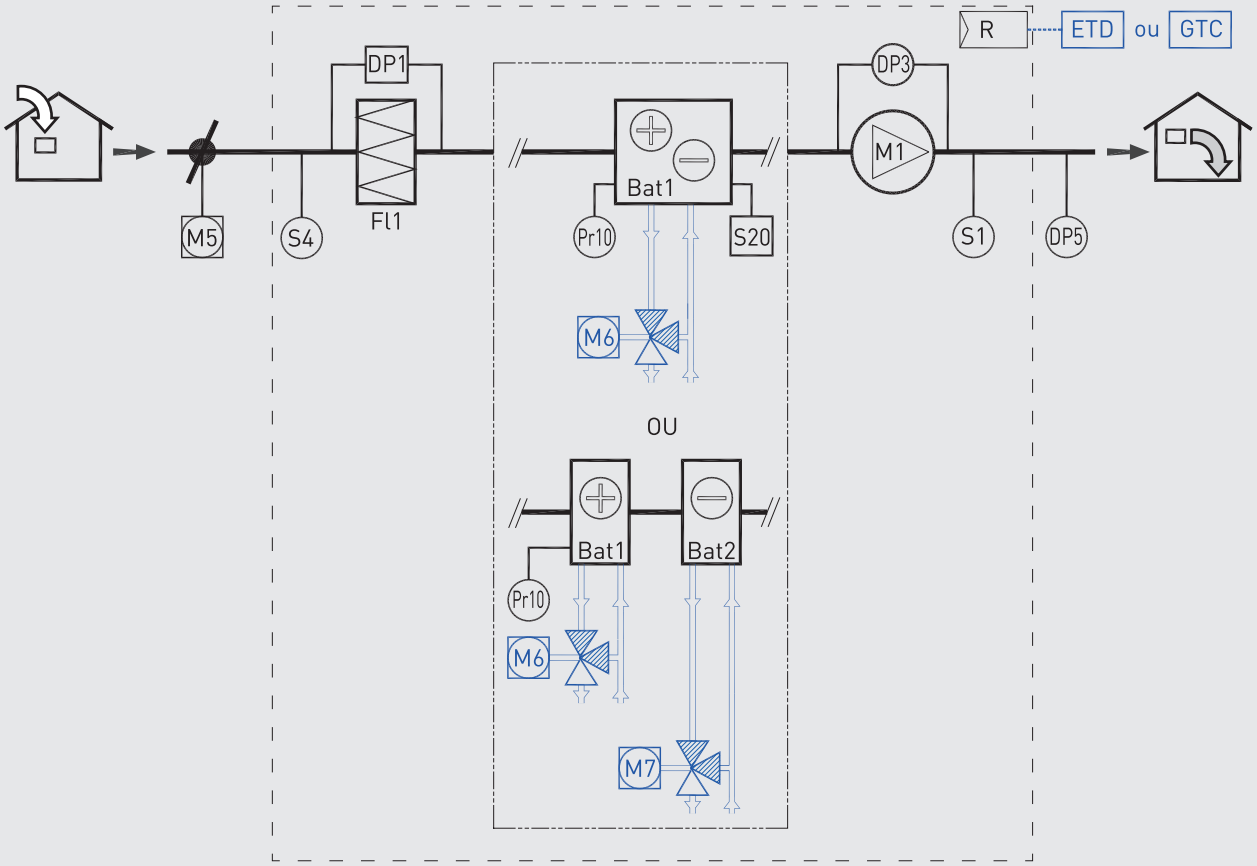

S1	Supply temperature probe	**M5**	Fresh air register	**DP5**	Pressure sensor (mode COP accessory)
S4	Fresh air temperature probe	**M6**	Motorised damper	**Bat1**	Reversible water coil / hot water
R	Controller	**M7**	Motorised damper	**Bat2**	Cold water coil
Pr10	Defrost sensor	**Fl1**	Fresh air filter	**ETD**	Remote hand terminal
S20	Change-over thermostat	**DP1**	Filter cloging detector		
M1	Motor-fan	**DP3**	Aiflow sensor		

TECHNICAL CHARACTERISTICS – CAIB

Version with electric heater

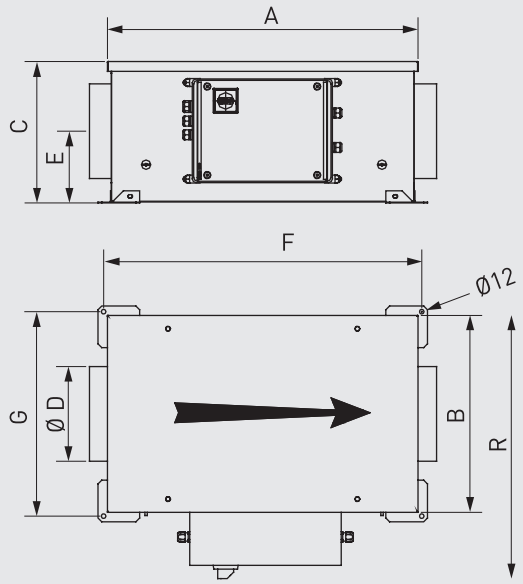

Version with hot or reversible water coil

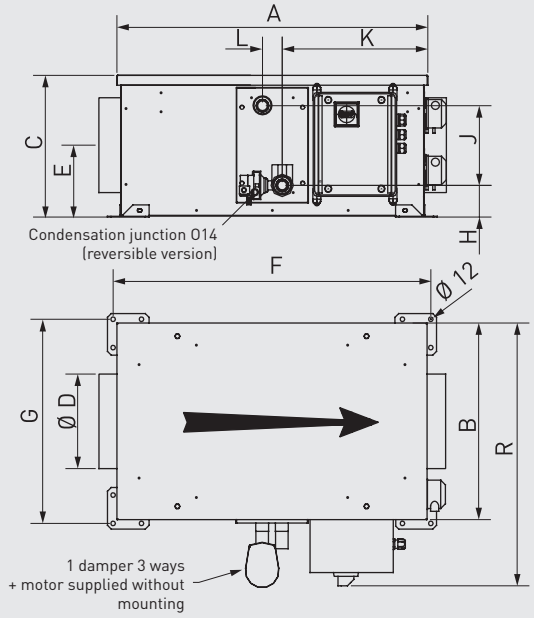

Version with hot + cold water coil

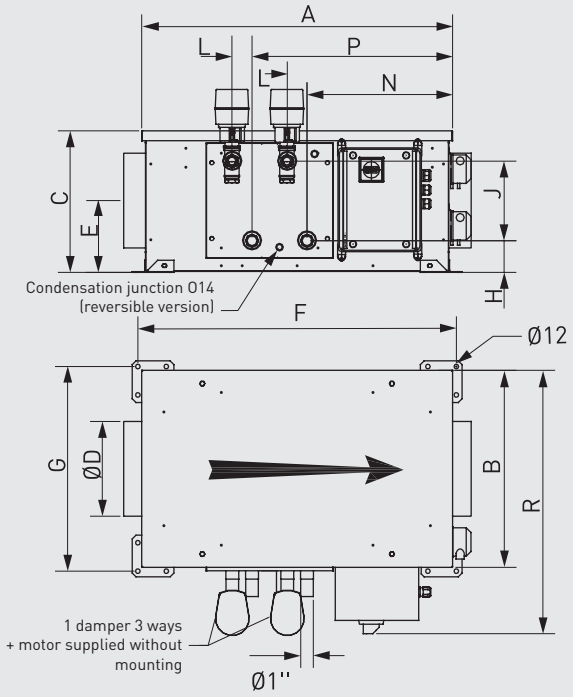

Model	Dimensions of the cabinet					Fittings		Water coil						Electric heater	
	A	B	C	ØD	E	F	G	H	J	K	L	N	P	Q	R
CAIB/T PRO-REG 08	820	520	370	250	190	840	540	85	210	400	52	437	582	585	695
CAIB/T PRO-REG 18	1120	670	600	355	275	1140	690	105	390	675	52	565	740	735	845
CAIB/T PRO-REG 28	1120	670	600	400	275	1140	690	105	390	675	52	565	740	735	845
CAIB/T PRO-REG 38	1120	670	600	400	265	1140	690	105	390	675	52	565	740	735	845

PERFORMANCE CURVES

- Q_v: Air volume in m^3/h and m^3/s.
- P_t: Total pressure in mmWG and Pa.
- Dry air at 20ºC and 760 mmHg.
- Performance data in accordance with ISO 5801 and AMCA 210-99 Standards.
- Sound pressure level in hemispherical free field, measured at 4 m, with outlet ducted Lp in dB (A).

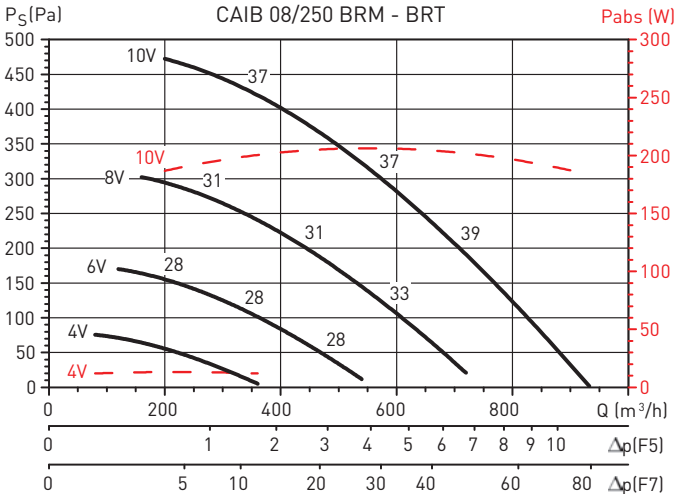

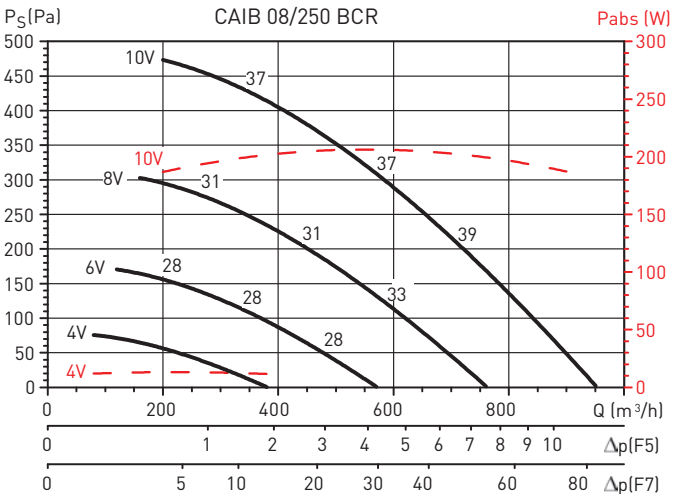

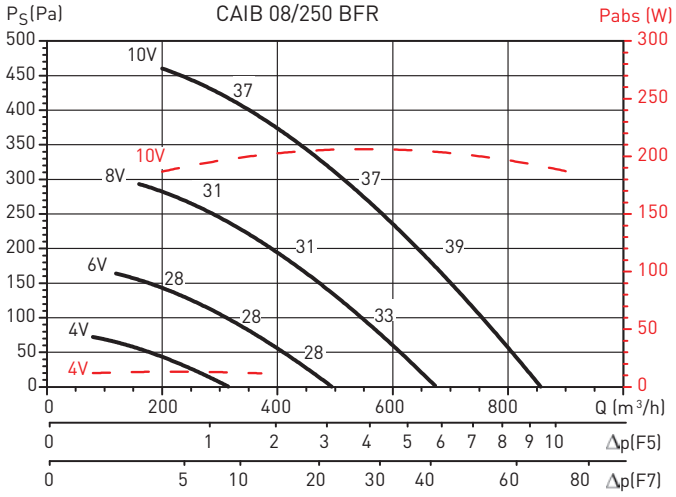

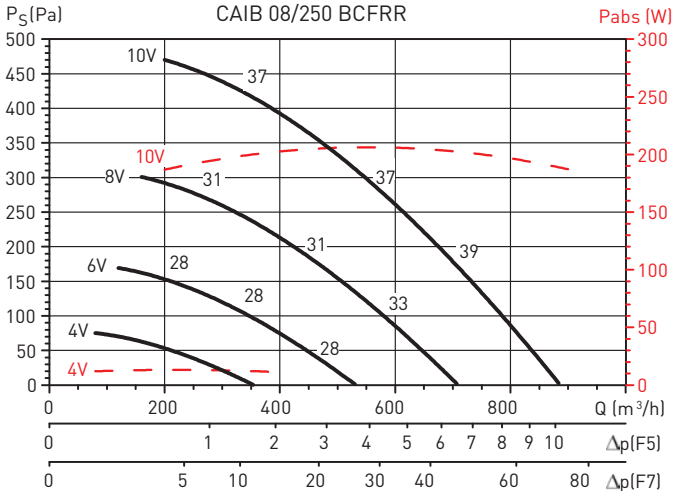

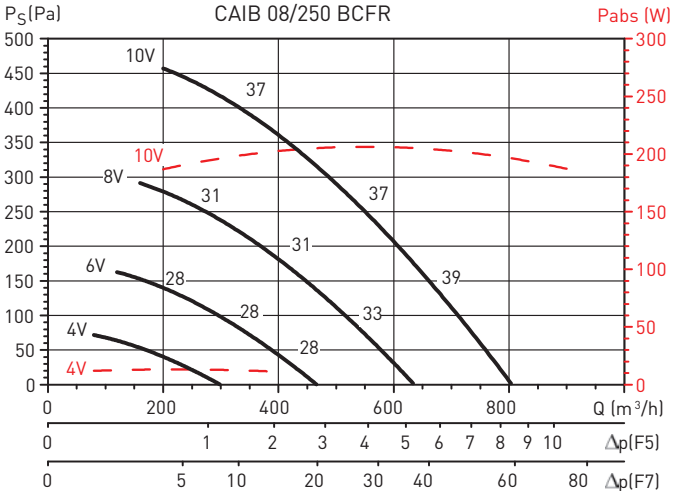

PERFORMANCE CURVES

- Q_v: Air volume in m^3/h and m^3/s.
- P_t: Total pressure in mmWG and Pa.
- Dry air at 20ºC and 760 mmHg.
- Performance data in accordance with ISO 5801 and AMCA 210-99 Standards.
- Sound pressure level in hemispherical free field, measured at 4 m, with outlet ducted Lp in dB (A).

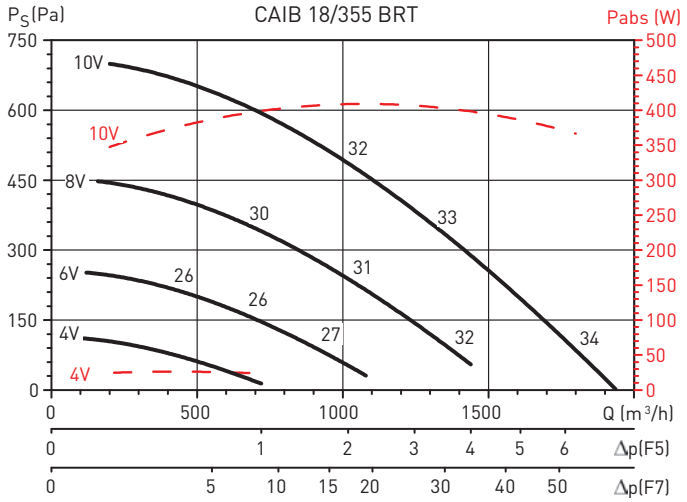

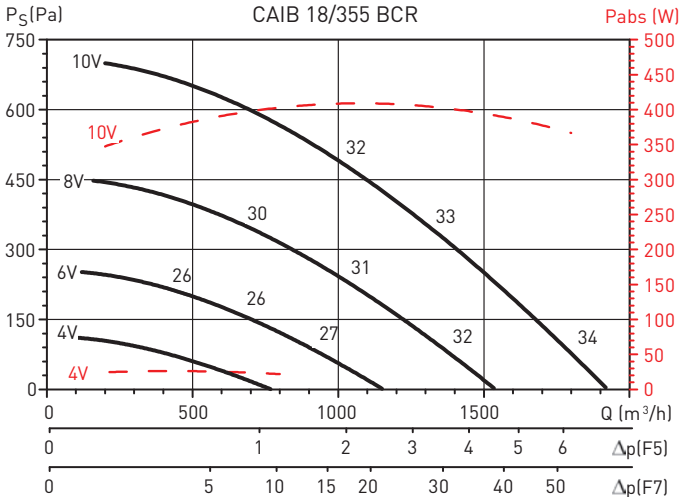

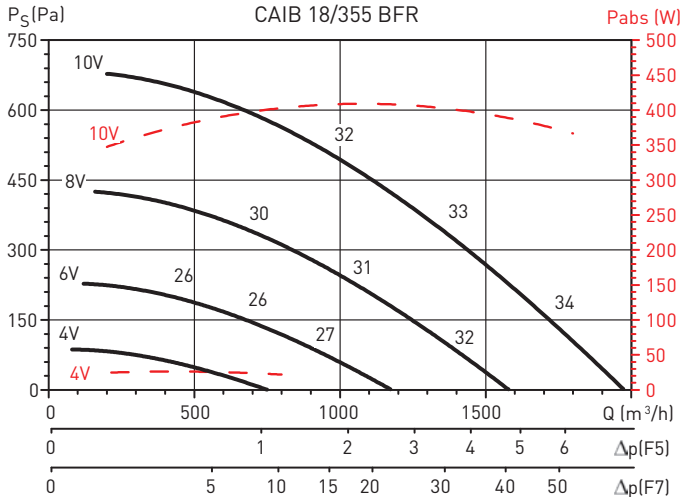

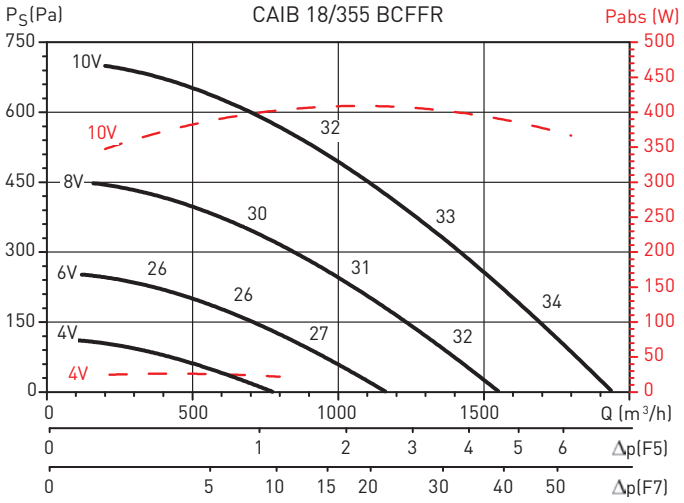

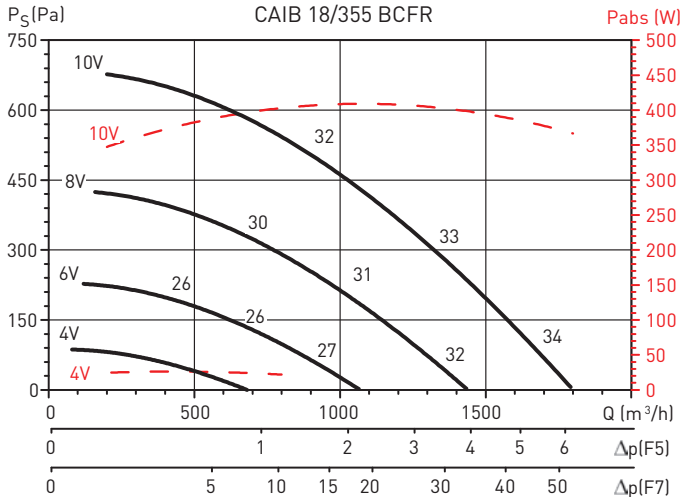

PERFORMANCE CURVES

- Q_v: Air volume in m^3/h and m^3/s.
- P_t: Total pressure in mmWG and Pa.
- Dry air at 20ºC and 760 mmHg.
- Performance data in accordance with ISO 5801 and AMCA 210-99 Standards.
- Sound pressure level in hemispherical free field, measured at 4 m, with outlet ducted Lp in dB (A).

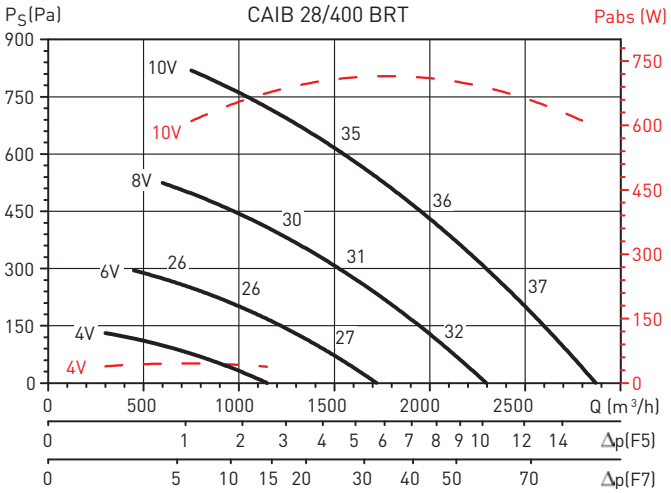

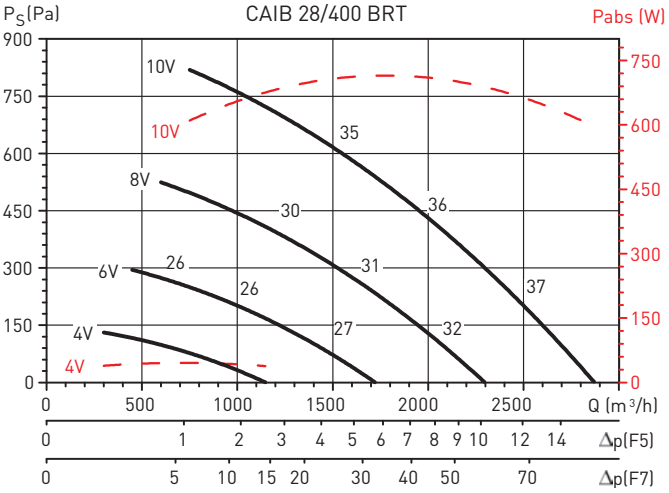

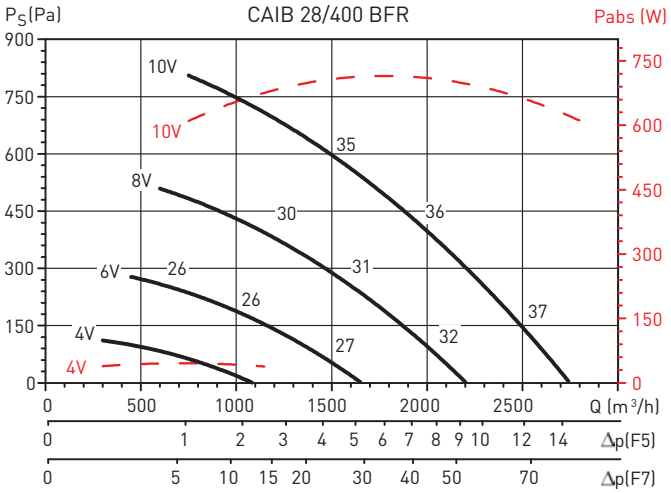

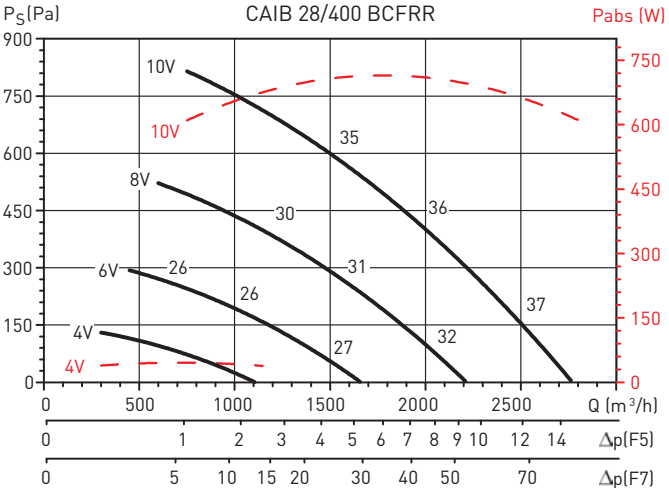

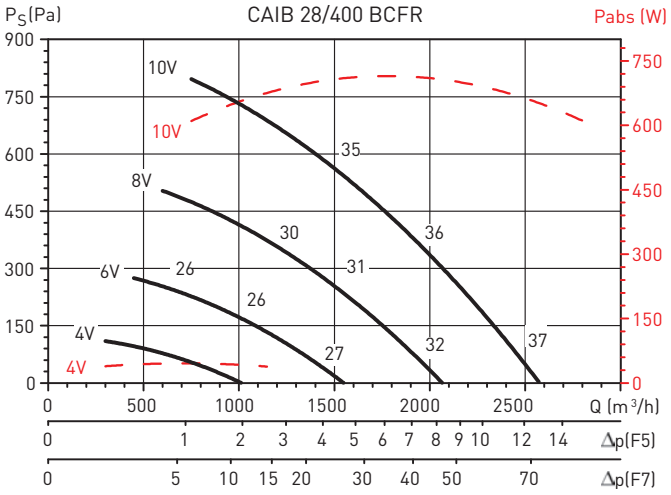

PERFORMANCE CURVES

- Q_v: Air volume in m³/h and m³/s.
- P_t: Total pressure in mmWG and Pa.
- Dry air at 20ºC and 760 mmHg.
- Performance data in accordance with ISO 5801 and AMCA 210-99 Standards.
- Sound pressure level in hemispherical free field, measured at 4 m, with outlet ducted Lp in dB (A).

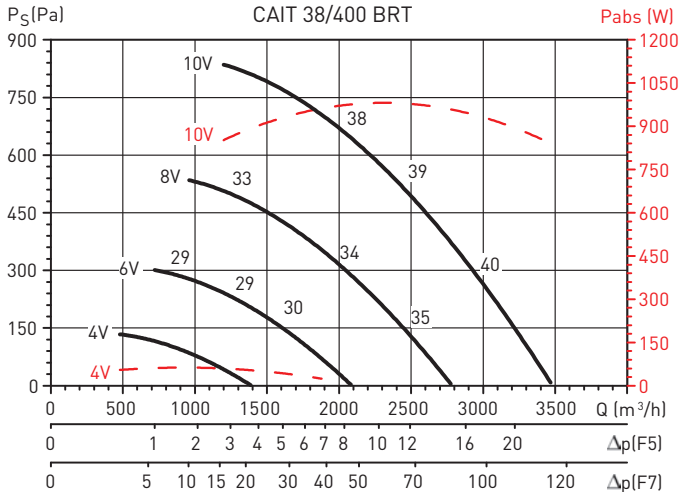

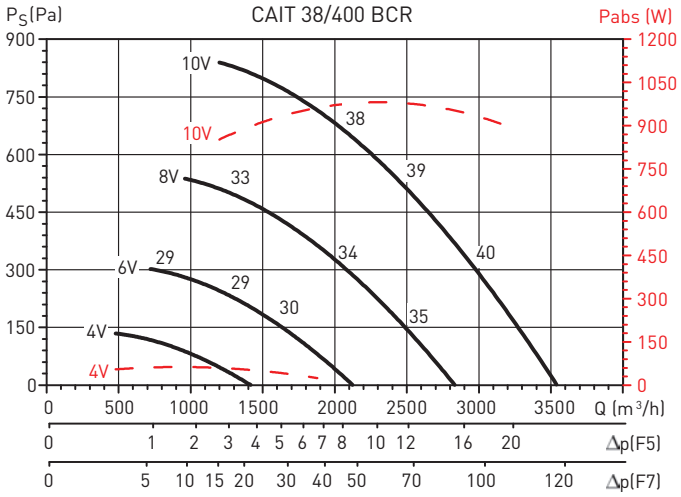

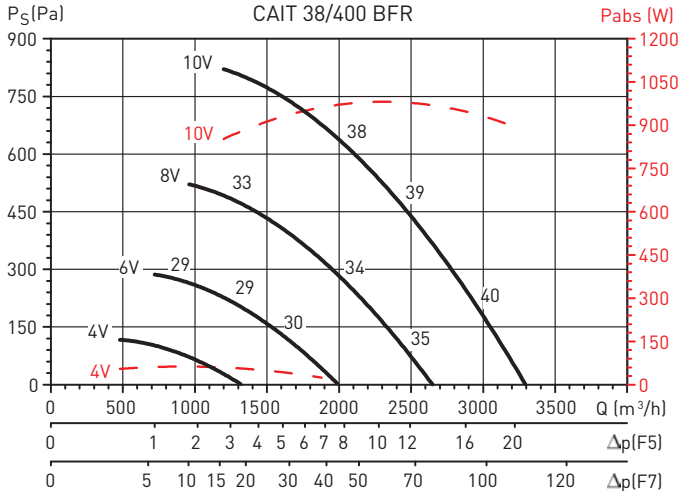

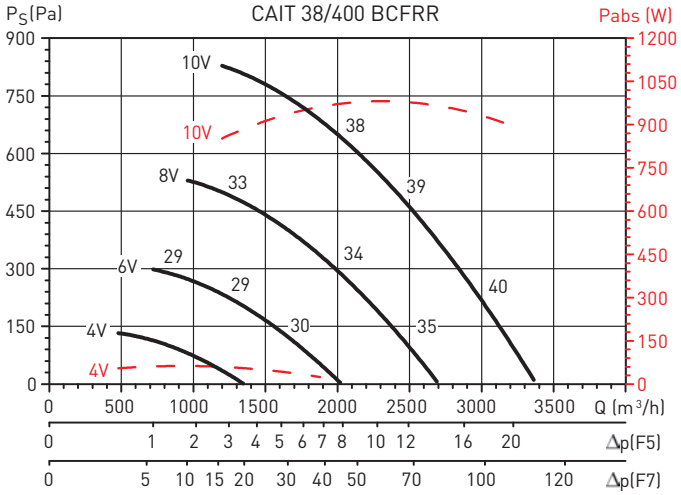

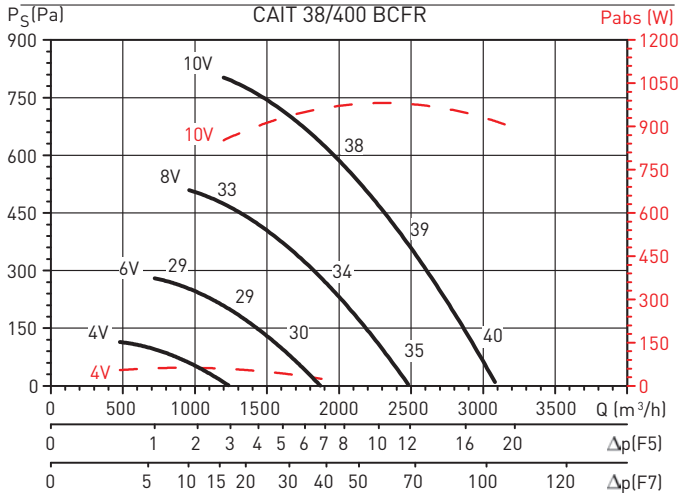

TECHNICAL CHARACTERISTICS- HOT WATER COIL

Water temperature: 90/70°C.
For different water temperatures see the chart at the bottom of the page.

Air inlet Tº (°C)	CAIB/T PRO-REG 08											
	- 10°C			0°C			10°C			15°C		
Airflow (m^3/h)	P (kW)	Air outlet Temp. (°C)	Water flow (l/h)	P (kW)	Air outlet Temp. (°C)	Water flow (l/h)	P (kW)	Air outlet Temp. (°C)	Water flow (l/h)	P (kW)	Air outlet Temp. (°C)	Water flow (l/h)
300	5,9	48	260	5,2	52	231	4,6	55	201	4,2	57	186
350	6,6	46	292	5,9	50	259	5,1	53	225	4,7	55	209
400	7,3	44	323	6,5	48	286	5,6	52	249	5,2	54	230
450	8,0	43	351	7,1	47	311	6,1	51	271	5,7	53	250
500	8,6	41	379	7,6	45	336	6,6	49	292	6,1	51	270
550	9,2	40	405	8,1	44	359	7,1	48	312	6,5	50	289
600	9,8	38	431	8,6	43	381	7,5	47	331	6,9	49	306
650	10,3	37	455	9,1	42	403	7,9	46	350	7,3	49	324
700	10,9	36	479	9,6	41	424	8,3	45	368	7,7	48	340
750	11,4	35	502	10,1	40	444	8,7	45	386	8,1	47	356
800	11,9	34	524	10,5	39	463	9,1	44	402	8,4	46	372
850	12,4	33	545	10,9	38	482	9,5	43	419	8,8	46	387
900	12,8	32	566	11,3	37	501	9,9	43	435	9,1	45	401

Air inlet Tº (°C)	CAIB/T PRO-REG 18/28/38											
	- 10°C			0°C			10°C			15°C		
Airflow (m^3/h)	P (kW)	Air outlet Temp. (°C)	Water flow (l/h)	P (kW)	Air outlet Temp. (°C)	Water flow (l/h)	P (kW)	Air outlet Temp. (°C)	Water flow (l/h)	P (kW)	Air outlet Temp. (°C)	Water flow (l/h)
500	13,0	67	579	11,6	69	517	10,2	70	453	9,5	71	421
600	15,0	64	668	13,4	66	596	11,8	68	522	10,9	68	485
700	17,0	62	753	15,1	64	671	13,2	66	588	12,3	67	446
800	18,8	59	833	16,7	62	742	14,6	64	650	13,6	65	604
900	20,5	57	910	18,3	59	810	16,0	62	710	14,8	63	659
1000	21,4	54	943	19,0	56	838	16,6	59	732	15,4	61	679
1200	24,6	51	1085	21,8	54	963	19,1	57	841	17,7	59	779
1400	27,6	49	1217	24,5	52	1081	21,4	55	943	19,8	57	873
1600	30,4	47	1342	27,0	50	1191	23,6	54	1039	21,8	56	963
1800	133,1	45	1461	29,4	49	1296	25,6	52	1130	23,7	54	1047
2000	35,7	43	1575	31,7	47	1396	27,6	51	1217	25,6	53	1127
2200	38,2	42	1683	33,8	46	1492	29,5	50	1300	27,3	52	1203
2400	40,5	40	1786	35,9	44	1584	31,3	49	1380	29,0	51	1277
2600	42,8	39	1886	37,9	43	1672	33,0	48	1456	30,6	50	1348
2800	44,9	38	1982	39,8	42	1756	34,7	47	1530	32,1	49	1415
3000	47,1	37	2075	41,7	41	1839	36,3	46	1601	33,6	48	1481
3200	49,1	36	2164	43,5	40	1918	37,8	45	1669	35,0	48	1544
3400	51,0	35	2251	45,2	40	1994	39,3	44	1735	36,4	47	1605

Power correction factors	
Water temperature 80/60°C	0,86
Water temperature 50/40°C	0,55

TECHNICAL CHARACTERISTICS – REVERSIBLE WATER COIL

Water temperature: 7/12ºC
For different water temperatures see the chart at the bottom of the page.

Air inlet Tº (ºC)	CAIB/T PRO-REG 08								
	25°C and 50%			27°C and 50%			32°C and 50%		
Airflow (m^3/h)	P (kW)	Air outlet Temp. (°C)	Water flow (l/h)	P (kW)	Air outlet Temp. (°C)	Water flow (l/h)	P (kW)	Air outlet Temp. (°C)	Water flow (l/h)
300	0,80	17,38	137	0,94	18,49	161	1,31	22,10	225
350	0,86	17,81	148	1,01	18,97	174	1,47	22,41	252
400	0,95	18,05	164	1,09	19,38	187	1,76	22,36	302
450	1,01	18,44	174	1,15	19,73	198	1,96	22,51	337
500	1,07	18,77	183	1,21	20,04	208	2,12	22,72	365
550	1,12	19,06	192	1,27	20,32	217	2,26	22,95	388
600	1,17	19,33	200	1,35	20,43	233	2,38	23,16	409
650	1,21	19,56	208	1,46	20,46	251	2,50	23,35	429
700	1,25	19,78	215	1,60	20,38	275	2,61	23,54	448
750	1,29	19,97	222	1,80	20,19	308	2,71	23,71	466
800	1,33	20,14	229	1,92	20,20	330	2,81	23,87	483
850	1,39	20,23	239	2,01	20,30	345	2,90	24,02	499
900	1,48	20,21	254	2,10	20,38	361	2,99	24,16	514

Air inlet Tº (ºC)	CAIB/T PRO-REG 18/28/38								
	25°C and 50%			27°C and 50%			32°C and 50%		
Airflow (m^3/h)	P (kW)	Air outlet Temp. (°C)	Water flow (l/h)	P (kW)	Air outlet Temp. (°C)	Water flow (l/h)	P (kW)	Air outlet Temp. (°C)	Water flow (l/h)
500	1,82	15,01	312	2,09	16,25	359	3,71	17,92	638
600	2,02	15,58	348	2,31	16,81	397	4,29	18,36	737
700	2,21	16,06	379	2,58	17,05	444	4,77	18,82	821
800	2,38	16,45	409	2,89	17,20	496	5,24	19,21	890
900	2,53	16,81	435	3,36	17,18	576	5,64	19,61	969
1000	2,80	16,83	481	3,84	17,10	659	6,01	19,96	1033
1200	3,72	16,3	638	4,43	17,42	761	6,71	20,55	1153
1400	4,27	16,44	733	4,95	17,75	850	7,33	21,05	1260
1600	4,71	16,71	809	5,39	18,07	926	7,90	21,45	1358
1800	5,10	16,97	876	5,79	18,36	995	8,43	21,82	1449
2000	5,47	17,21	940	6,17	18,62	1060	8,94	22,13	1537
2200	5,81	17,43	998	6,87	18,49	1181	9,44	22,39	1622
2400	6,07	17,69	1044	7,18	18,78	1235	9,80	22,68	1684
2600	6,36	17,90	1093	7,54	18,99	1296	10,25	22,89	1761
2800	6,92	17,79	1190	7,87	19,19	1352	10,67	23,09	1834
3000	7,26	17,94	1248	8,19	19,38	1408	11,08	23,26	1904
3200	7,55	18,12	1298	8,49	19,55	1460	11,50	23,41	1977
3400	7,83	18,28	1346	8,79	19,71	1511	12,36	23,28	2124

Power correction factors			
Air inlet	Water temperature		
	5-10°C	6-11°C	8-13°C
25°C and 50% HR	1,2	1,1	0,9
27°C and 50% HR	1,18	1,08	0,9
32°C and 50% HR	1,12	1,06	0,9

TECHNICAL CHARACTERISTICS- COLD WATER COIL

Water temperature: 7/12ºC
For different water temperatures see the chart at the bottom of the page.

Air inlet Tº (°C)	CAIB/T PRO-REG 08								
	25°C and 50%			27°C and 50%			32°C and 50%		
Airflow (m³/h)	P (kW)	Air outlet Temp. (°C)	Water flow (l/h)	P (kW)	Air outlet Temp. (°C)	Water flow (l/h)	P (kW)	Air outlet Temp. (°C)	Water flow (l/h)
300	1,51	13,17	259	1,84	13,94	315	2,92	15,43	501
350	1,7	13,46	292	2,07	14,22	356	3,29	15,86	565
400	1,88	13,71	323	2,31	14,43	397	3,64	16,23	626
450	2,05	13,94	352	2,53	14,67	434	3,98	16,57	684
500	2,21	14,15	380	2,73	14,92	468	4,3	16,88	739
550	2,37	14,35	406	2,92	15,14	502	4,61	17,16	793
600	2,52	14,52	433	3,1	15,35	533	4,91	17,41	844
650	2,68	14,64	461	3,28	15,53	564	5,19	17,66	892

Air inlet Tº (°C)	CAIB/T PRO-REG 18/28/38								
	25°C and 50%			27°C and 50%			32°C and 50%		
Airflow (m³/h)	P (kW)	Air outlet Temp. (°C)	Water flow (l/h)	P (kW)	Air outlet Temp. (°C)	Water flow (l/h)	P (kW)	Air outlet Temp. (°C)	Water flow (l/h)
500	2,77	12,36	475	3,4	12,94	584	5,38	14,08	924
600	3,24	12,58	557	3,95	13,26	679	6,25	14,53	1074
700	3,68	12,82	631	4,47	13,54	768	7,09	14,91	1218
800	4,08	13,06	701	4,97	13,79	854	7,9	15,23	1358
900	4,47	13,28	767	5,44	14,04	935	8,66	15,56	1488
1000	4,85	13,45	834	5,98	14,12	1027	9,41	15,84	1617
1100	5,22	13,63	897	6,43	14,32	1104	10,13	16,1	1740
1200	5,57	13,8	957	6,86	14,51	1178	10,82	16,35	1859
1300	5,9	13,96	1014	7,26	14,7	1247	11,49	16,58	1974
1400	6,23	14,11	1070	7,68	14,86	1319	12,13	16,79	2084
1500	6,54	14,25	1124	8,08	15,01	1388	12,75	17	2192
1600	6,86	14,37	1178	8,45	15,16	1452	13,38	17,18	2299
1700	7,15	14,5	1228	8,81	15,31	1514	13,96	17,37	2399
1800	7,49	14,56	1287	9,18	15,45	1577	14,55	17,53	2500
1900	7,78	14,69	1336	9,53	15,57	168	15,12	17,69	2599
2000	8,08	14,79	1338	9,88	15,69	1697	15,66	17,86	2692

Power correction factors			
Air inlet	Water temperature		
	5-10°C	6-11°C	8-13°C
25°C and 50% HR	1,2	1,1	0,9
27°C and 50% HR	1,18	1,08	0,9
32°C and 50% HR	1,12	1,06	0,9

ACOUSTIC CHARACTERISTICS

Sound power spectrum: To obtain the sound pressure spectrum, add the correction values (dB(A)) show in the table below at the corresponding octave average frequencies, from the value provided in the product performance curves.

Correction	63 Hz	125 Hz	250 Hz	500 Hz	1000 Hz	2000 Hz	4000 Hz	8000 Hz
Lw dB	1	0	-7	-5	-5	-6	-10	-15
Lp (4 m) dB	17	8	0	-5	-6	-12	-16	-21

MOUNTING ACCESSORIES

ACOPEL F400 N
Circular flexible connector.

APC
Rain cap with protection cowl against birds.

REEV 250/355/400
Defrost damper.

LF-230 S
LF-24 S
Motor for the defrost damper.

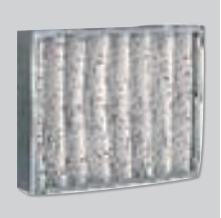

Filter
G4, M5 and F7 filters available.

Model	Filter		
	G4	M5	F7
CAIB 08	AFR CAIB 08 G4	AFR CAIB 08 M5	AFR CAIB 08 F7
CAIB 18/28/38 G4	AFR CAIB 18/28/38 G4	AFR CAIB 18/28/38 M5	AFR CAIB 18/28/38 f7

Model	Protection guard	Silencer	Flexible connector	Isolation damper	Actuator	
					230V	24V
CAIB 08	APC-250	SIL-250	ACOPEL F400-250/160 N	REEV 250	LF 230 S	LF 24 S
CAIB 18/28	APC-355	SIL-355	ACOPEL F400-355/160 N	REEV 355		
CAIB 38	APC-400	SIL-400	ACOPEL F400-400/160 N	REEV 400		

ELECTRICAL ACCESSORIES

BCCA 2V
Control box 2 speeds

CVF
Remote control ON/OFF + potentio-meter

SCO2-G
CO_2 sensor for the duct.

SCO2 A
Ambient Sensor

SCO2
Ambient sensor that optimizes the energy of the ventilation system

TGR
Room Sensor

SHUR
Humidity sensor

SPRD B
Pressure sensor.

CADB/T-HE 04 to 21

CADB/T-HE 40 and 54

F7 Supply
M5 Extract

FILTERS

REVIT BIM LEVEL2

REVIT models available for all sizes and configurations

AUTODESK REVIT

Versions

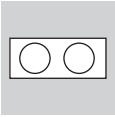

HORIZONTAL CONFIGURATION

WITHOUT ADDITIONAL HEAT

ELECTRIC BATTERY INCLUDED

WATER COIL INCLUDED

Compact heat recovery unit with high-efficiency (up to 93%) counter-flow heat exchanger, EUROVENT certified. The casing is made from plasticised galvanised steel in white. Panels are double skinned with thermo-acoustic flameproof insulation (M0), made from 25mm thick fiberglass, 25mm thickness in false ceiling versions (Models 04 to 21) and 50mm in Outdoor versions (Models 40 and 54). Configurable and airtight supply and exhaust spigots, suitable for horizontal installation.

Applications
Commercial premises, offices, restaurants, public buildings, schools.

CADB/T-HE D ECOWATT
Heat recovery units without additional incorporated heater.

CADB/T-HE DI ECOWATT
Heat recovery units with built-in electric heater battery.

CADB/T-HE DC ECOWATT
Heat recovery units with built-in low pressure hot water coil.

The 3-Way valve is provided as an accessory (see accessories table for this series)

Motors
Models 04 to 21: EC motors with integrated electronic protection, IP44, Class B.
Models 40 and 54: Three phase motors, IP55, Class F.

Fans
Plug-fan with backward curved impeller.
All fans installed in CADB/T- HE ECOWATT models, comply with the efficiency requirements of the ErP Directive

Filters
- F7: Low pressure F7 filters for supply air.
- M5: M5 filters for extract air.

Additional information
Single phase (CADB-HE) and three phase models (CADT-HE).
Airflows from 400 to 5400 m³/h at 150 Pa of static pressure available.
All versions and models include by-pass.
Mounting flexibility provided by the interchangeable side panels.

CADB/T 40 and 54 models with frequency converter included inside the unit (an inverter for each fan, which allows independent adjustment of supply and extract airflow).

MODELS CADB/T-HE 04 to 21 ECOWATT

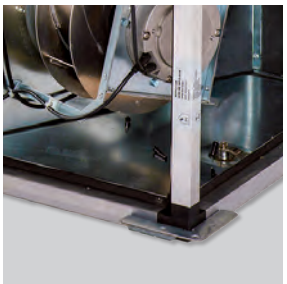

Low noise level and robust construction
Casing with double skinned 25 mm panels with thermoacoustic flameproof insulation M0, with high-quality finish and plastic corners.

Pressure ports
behind and after filters, to control their cleaning.

High-efficiency motors
Incorporating Plug-fans with EC single-phase motor.

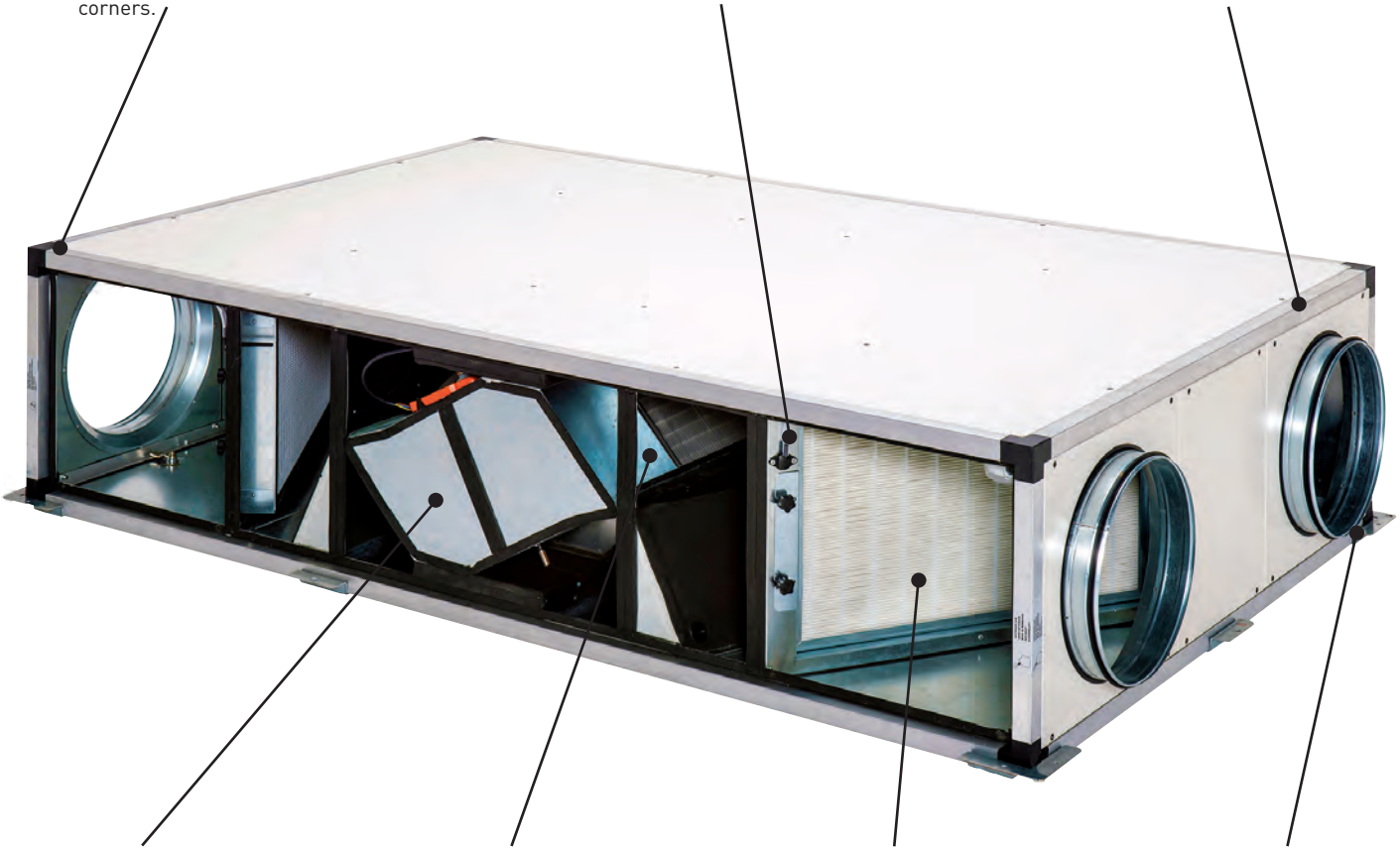

Bypass
All versions include internal bypass (approximately 75% airflow).

Counterflow heat exchanger
high-efficiency (up to 93%), EUROVENT certified.

High-efficiency filters
-F7 Filters: Low pressure F7 filters for supply air.
-M5 Filters: M5 filters for extract air. Possibility of mounting a second filter (accessory)

Support
Specific supports to allow installation in false ceilings via threaded rods.

MODELS CADB/T-HE 40 and 54 ECOWATT

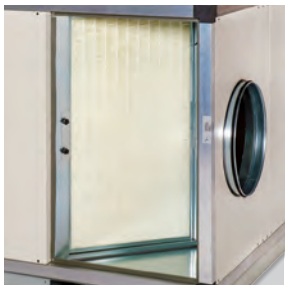

High-efficiency filters
-F7 Filters: Low pressure F7 filters for supply air.
-M5 Filters: M5 filters for extract air. Possibility of mounting a second filter (accessory)

Low noise level and robust construction
Casing with 50mm. profiles structure with double skinned panels with thermoacoustic flameproof insulation M0, with high-quality finish and plastic corners.

Bypass
All versions include internal bypass (approximately 75% airflow)

Frequency converter
Integrated inside the unit (1 frequency converter per fan)

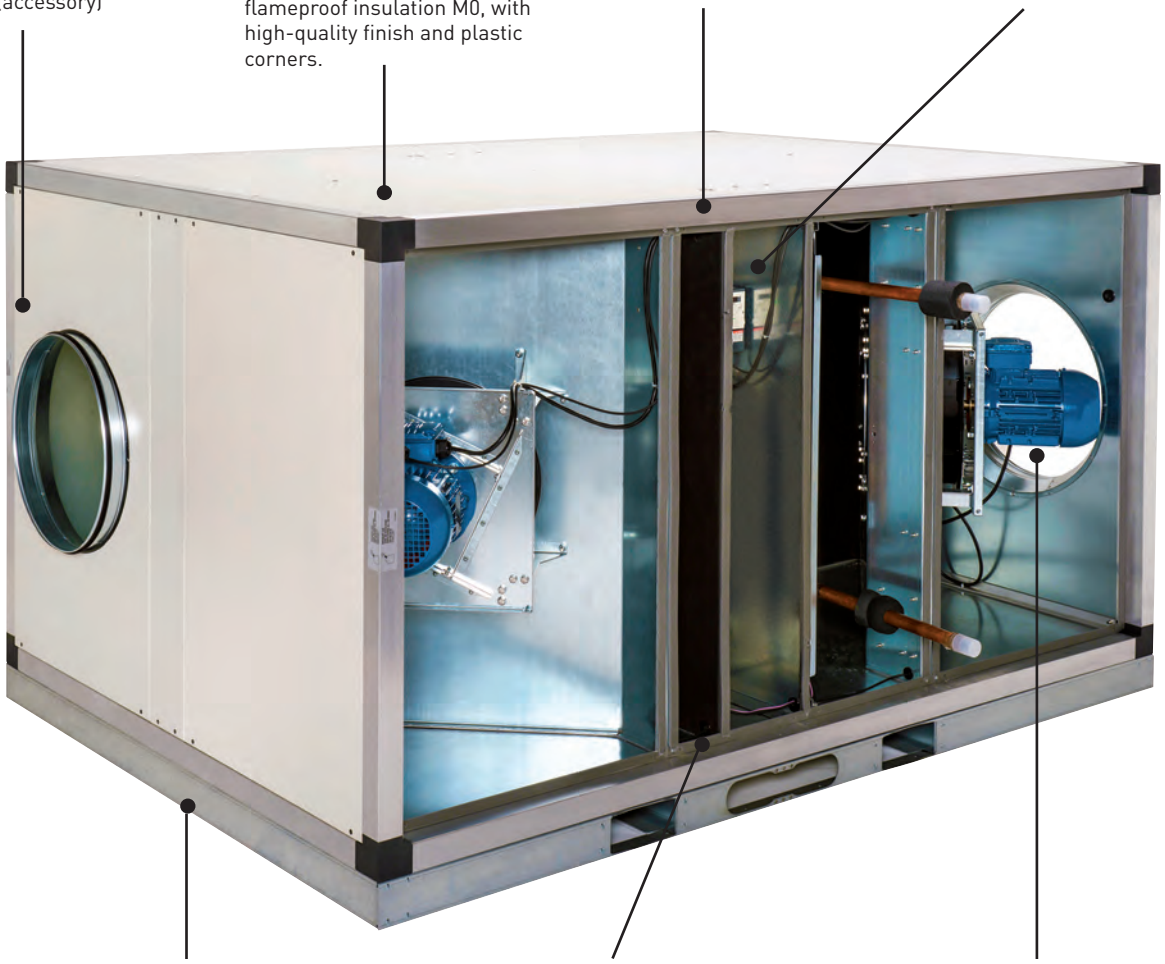

Structural base
It provides a high rigidity and allows the easy levelling of the unit in outdoor installations.

Counterflow heat exchanger
of high-efficiency (up to 93%), EUROVENT certified.

Motors
Plug-fans with 3-phase AC motors, equipped with frequency converter (one per motor)

HIGHEST FLEXIBILITY


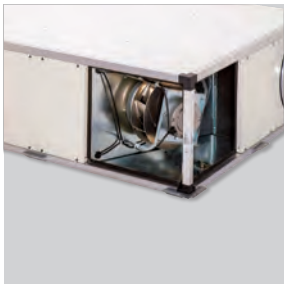

Versatile assembly
The design of our heat recovery units makes it possible for the user to configure them on site. Panels are interchangeable (except the control panel), which makes it possible to change the position of inlet and outlet connections directly on site, depending on the specific requirements.

Multiple possibilities for exchanging the panels

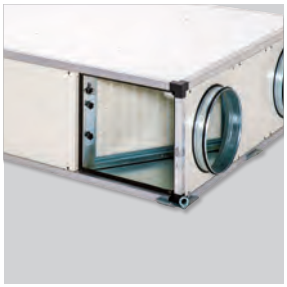
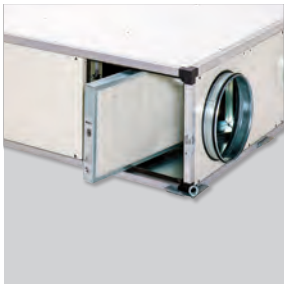

Easy maintenance
Models 04 to 54: easy access to filters from side panels.


Easy maintenance
Models 04 to 21: easy access to filters from bottom panels.



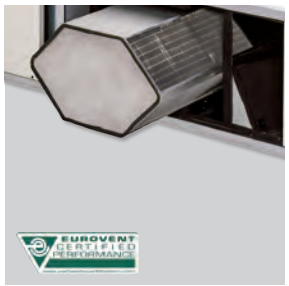

Models 04 to 21: Easy access for cleaning the exchanger from side and bottom panels. Disassembly required.
Models 40 and 54: Easy access for cleaning the exchanger from side panels.

REFERENCE

C A D B - HE	D I	16	LH	ECOWATT
1	2	3	4	5

1 - Series:
CADB-HE: Single-phase
CADT-HE: Three-phase

2 - Heater options:
D: Standard range (no heating)
DI: Range with built-in electric heater battery.
DC: Range with built-in hot water coil.

3 - Size

4 - Type of configuration:
LH: Left horizontal
RH: Right horizontal
LV: Left vertical
RV: Right vertical

5 - ECOWATT: Range with EC motors or AC motors + Integrated Frequency converter (depending on model)

STANDARD VERSIONS CADB/T-HE PRO-REG

Without battery

CADB-HE	-D	04	LH	ECOWATT
CADB-HE	-D	08	LH	ECOWATT
CADB-HE	-D	16	LH	ECOWATT
CADB-HE	-D	21	LH	ECOWATT
CADB-HE	-D	40	LH	ECOWATT
CADB-HE	-D	54	LH	ECOWATT

CADB-HE	-D	40	RH	ECOWATT
CADB-HE	-D	54	RH	ECOWATT

In 04 to 21 models without batteries, the RH configuration is obtained from LH version, by inverting the by-pass position.

With hot water coil

CADB-HE	-DC	04	LH	ECOWATT
CADB-HE	-DC	08	LH	ECOWATT
CADB-HE	-DC	16	LH	ECOWATT
CADB-HE	-DC	21	LH	ECOWATT
CADB-HE	-DC	40	LH	ECOWATT
CADB-HE	-DC	54	LH	ECOWATT

CADB-HE	-DC	04	RH	ECOWATT
CADB-HE	-DC	08	RH	ECOWATT
CADB-HE	-DC	16	RH	ECOWATT
CADB-HE	-DC	21	RH	ECOWATT
CADB-HE	-DC	40	RH	ECOWATT
CADB-HE	-DC	54	RH	ECOWATT

With electric heater battery

CADB-HE	-DI	04	LH	ECOWATT
CADB-HE	-DI	08	LH	ECOWATT
CADB-HE	-DI	16	LH	ECOWATT
CADT-HE	-DI	21	LH	ECOWATT
CADT-HE	-DI	40	LH	ECOWATT
CADT-HE	-DI	54	LH	ECOWATT

CADB-HE	-DI	04	RH	ECOWATT
CADB-HE	-DI	08	RH	ECOWATT
CADB-HE	-DI	16	RH	ECOWATT
CADT-HE	-DI	21	RH	ECOWATT
CADT-HE	-DI	40	RH	ECOWATT
CADT-HE	-DI	54	RH	ECOWATT

TECHNICAL CHARACTERISTICS

Models without heater-D

	Complete unit			Fan			Weight (kg)
	Air connections diameter (mm)	Nominal airflow (m^3/h)	Efficiency* (%)	Electrical supply	Speed (rpm)	Maximum current (A)	
CADB-HE D 04 ECOWATT	200	400	87	1/230V, 50Hz	3500	0,62	145
CADB-HE D 08 ECOWATT	250	800	86,4	1/230V, 50Hz	2650	1,1	180
CADB-HE D 16 ECOWATT	315	1600	85,5	1/230V, 50Hz	2845	1,6	231
CADB-HE D 21 ECOWATT	400	2100	86,7	1/230V, 50Hz	1580	1,9	328
CADB-HE D 40 ECOWATT	450	4000	86,8	1/230V, 50Hz	2435	3,5	588
CADB-HE D 54 ECOWATT	500	5400	87,1	1/230V, 50Hz	1945	4,8	718

* Humid efficiency referring to nominal airflow, outdoor conditions (-5ºC / 80% RH) and indoor (20ºC / 50% RH)

Models with built in hot water coil

	Complete unit			Fan			Hot water coil		Weight (kg)
	Air connections diameter (mm)	Nominal airflow (m^3/h)	Efficiency* (%)	Electrical supply	Speed (rpm)	Maximum current (A)	Heat power T.water 80/60ºC (kW)	Heat power T.water 50/45ºC (kW)	
CADB-HE DC 04 ECOWATT	200	400	87	1/230V, 50Hz	3500	0,62	2,7	1,6	147
CADB-HE DC 08 ECOWATT	250	800	86,4	1/230V, 50Hz	2650	1,1	5,1	3,1	183
CADB-HE DC 16 ECOWATT	315	1600	85,5	1/230V, 50Hz	2845	1,6	8,6	5,3	235
CADB-HE DC 21 ECOWATT	400	2100	86,7	1/230V, 50Hz	1580	1,9	12,6	7,8	333
CADB-HE DC 40 ECOWATT	450	4000	86,8	1/230V, 50Hz	2435	3,5	23,9	14,4	597
CADB-HE DC 54 ECOWATT	500	5400	87,1	1/230V, 50Hz	1945	4,8	32,1	19,5	730

* Humid efficiency referring to nominal airflow, outdoor conditions (-5ºC / 80% RH) and indoor (20ºC / 50% RH)

Models with built-in electric heater battery- DI

	Complete unit			Fan			Electric heater battery			Weight (kg)
	Air connections diameter (mm)	Nominal airflow (m^3/h)	Efficiency* (%)	Electrical supply	Speed (rpm)	Maximum current (A)	Electrical supply	Speed (rpm)	Maximum current (A)	
CADB-HE DI 04 ECOWATT	200	400	87	1/230V, 50Hz	3500	0,62	1/230V, 50Hz	1	4,5	146
CADB-HE DI 08 ECOWATT	250	800	86,4	1/230V, 50Hz	2650	1,1	1/230V, 50Hz	2	9,1	183
CADB-HE DI 16 ECOWATT	315	1600	85,5	1/230V, 50Hz	2845	1,6	1/230V, 50Hz	3,5	15,9	235
CADT-HE DI 21 ECOWATT	400	2100	86,7	1/230V, 50Hz	1580	1,9	3/400V, 50Hz	6	9,1	333
CADT-HE DI 40 ECOWATT	450	4000	86,8	1/230V, 50Hz	2435	3,5	3/400V, 50Hz	9	13,7	597
CADT-HE DI 54 ECOWATT	500	5400	87,1	1/230V, 50Hz	1945	4,8	3/400V, 50Hz	12	18,2	730

* Humid efficiency referring to nominal airflow, outdoor conditions (-5ºC / 80% RH) and indoor (20ºC / 50% RH)

ACOUSTIC CHARACTERISTICS

Model	Inlet	Outlet	Radiated
CADB-HE 04 ECOWATT	47	56	39
CADB-HE 08 ECOWATT	43	52	35
CADB-HE 16 ECOWATT	44	53	36
CADB/T-HE 21 ECOWATT	48	59	42
CADB/T-HE 40 ECOWATT	51	63	46
CADB/T-HE 54 ECOWATT	53	64	47

Average sound pressure level in free field conditions at 3m distance.

RECOVERY EFFICIENCY ACCORDING TO THE AIRFLOW

Values referring to the following conditions:
Outdoor temperature: -5ºC, RH=80%
Indoor temperature: 20ºC, RH-=50%.

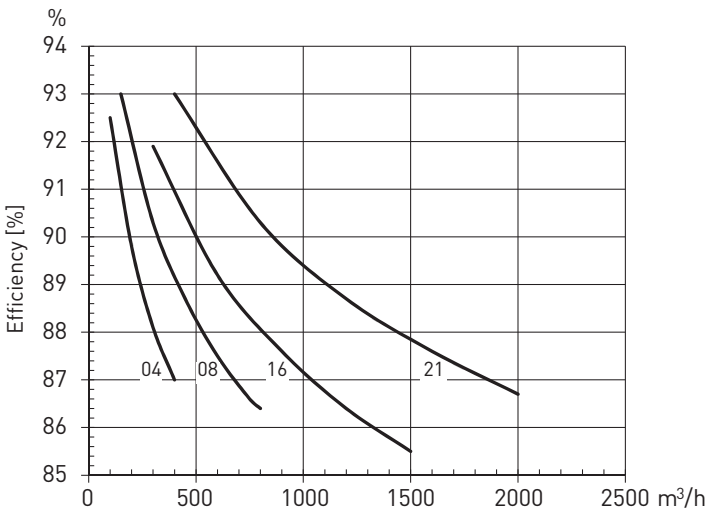

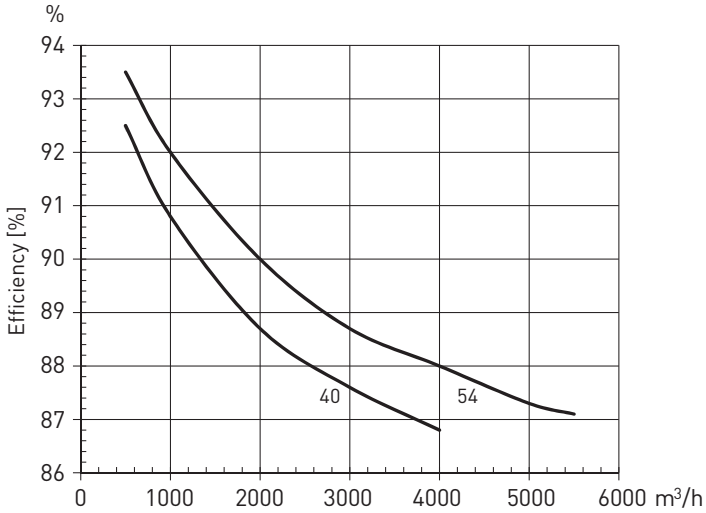

RECOVERY EFFICIENCY RELATIVE TO OUTDOOR TEMPERATURE

		OUTDOOR AIR		INDOOR AIR		PERFORMANCE*	
Model	**Airflow (m³/h)**	**Temperature (ºC)**	**RH (%)**	**Temperature (ºC)**	**RH (%)**	**Efficiency (%)**	**Recovered power (kW)**
CADB-HE 04	400	-10	80	17,2	10,6	90,7	3,65
		-5	80	16,7	16,9	87	2,92
		0	70	16,6	22,7	82,8	2,23
		5	70	17,1	31,3	80,9	1,63
CADB-HE 08	800	-10	80	17	10,7	90,1	7,3
		-5	80	16,6	17	86,4	5,8
		0	70	16,6	22,9	82,2	4,4
		5	70	17	31,5	80,2	3,2
CADB-HE 16	1600	-10	80	16,7	10,9	89,1	14,4
		-5	80	16,3	17,3	85,3	11,5
		0	70	16,2	23,3	80,9	8,7
		5	70	16,8	31,9	78,8	6,4
CADB/T-HE 21	2100	-10	80	17,1	10,7	90,2	19,1
		-5	80	16,6	17	86,5	15,2
		0	70	16,5	22,9	82,3	11,6
		5	70	17	31,4	80,3	8,5
CADB/T-HE 40	4000	-10	80	16,5	12,2	88,2	38,1
		-5	80	16,7	17,7	86,8	30,9
		0	70	17	22	85,1	24
		5	70	17,4	30,7	82,9	17,3
CADB/T-HE 54	5400	-10	80	16,6	12,1	88,5	51,5
		-5	80	16,8	17,6	87,1	41,8
		0	70	17,1	21,9	85,7	32,5
		5	70	17,5	30,5	83,3	23,5

*For indoor temperature 20ºC 50%

RECOVERY EFFICIENCY OF WATER COILS RELATIVE TO OUTDOOR TEMPERATURE AND AIRFLOW

			AIR			WATER	
Model	**Water T. In/Out (ºC)**	**Airflow (m^3/h)**	**Power (kW)**	**Out. T (ºC)**	**Out. RH (%)**	**Water flow (l/h)**	**Press. Drop (kPa)**
CADB-HE 04	80/60	400	2,7	36,7	8	115	2
		280	2,1	39,4	7	92	2
	70/60	400	2,5	35,6	8	217	6
		280	2,0	38,1	7	172	4
	50/45	400	1,6	28,8	12	277	10
		280	1,3	30,4	11	220	7
CADB-HE 08	80/60	800	5,1	35,7	8	218	5
		560	4,1	38,6	7	175	3
	70/60	800	4,8	34,7	9	415	14
		560	3,8	37,2	8	330	9
	50/45	800	3,1	28,3	13	530	22
		560	2,4	29,8	12	422	15
CADB-HE 16	80/60	1600	8,6	32,8	10	370	6
		1120	6,9	35,2	9	298	3
	70/60	1600	8,3	32,2	10	370	15
		1120	6,6	34,5	9	298	10
	50/45	1600	5,3	26,7	14	370	25
		1120	4,2	28,2	13	298	17
CADB/T-HE 21	80/60	2100	12,6	34,6	9	542	3
		1470	10,1	37,1	8	433	2
	70/60	2100	12,2	34,0	9	1050	11
		1470	9,7	36,4	8	837	8
	50/45	2100	7,8	27,9	13	1342	18
		1470	6,2	29,4	12	1070	12
CADB/T-HE 40	80/60	4000	23,9	34,5	9	1025	9
		2800	19,1	37,1	8	824	6
	70/60	4000	22,5	33,5	9	1940	27
		2800	18,0	35,9	8	1552	18
	50/45	4000	14,4	27,5	13	2476	44
		2800	11,5	29,1	12	1980	29
CADB/T-HE 54	80/60	5400	32,1	34,4	9	1380	6
		3780	25,8	37	8	1106	4
	70/60	5400	30,6	33,6	9	2634	19
		3780	24,5	36,0	8	2107	13
	50/45	5400	19,5	27,6	13	3366	31
		3780	15,6	29,1	12	2691	21

STANDARD CONFIGURATIONS CADB/T-HE D/DI/DC ECOWATT

Based on these standard configurations other configurations can be quickly adapted by the installer.

CADB/T-HE 04 TO 21
Horizontal versions (false-ceiling)

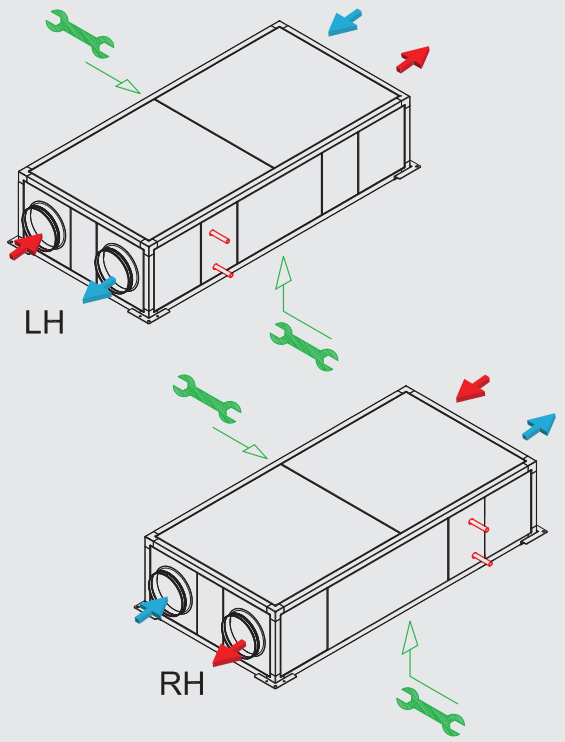

CADB/T-HE 40 AND 54
Horizontal versions

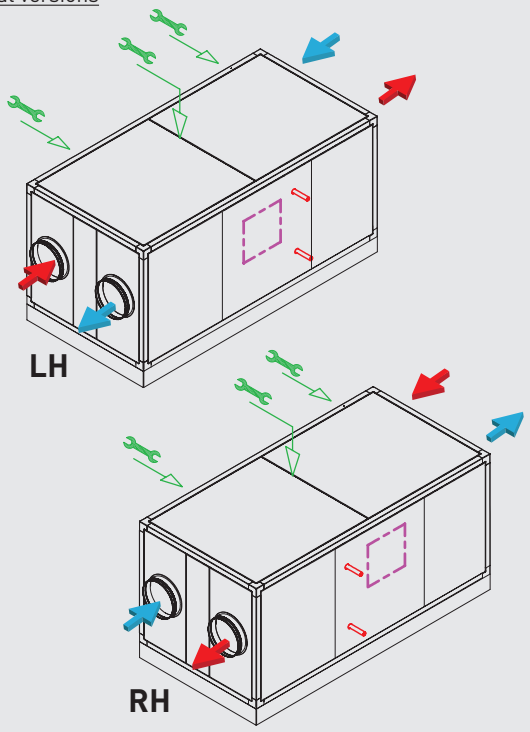

CADB/T-HE 40 AND 54
Vertical versions

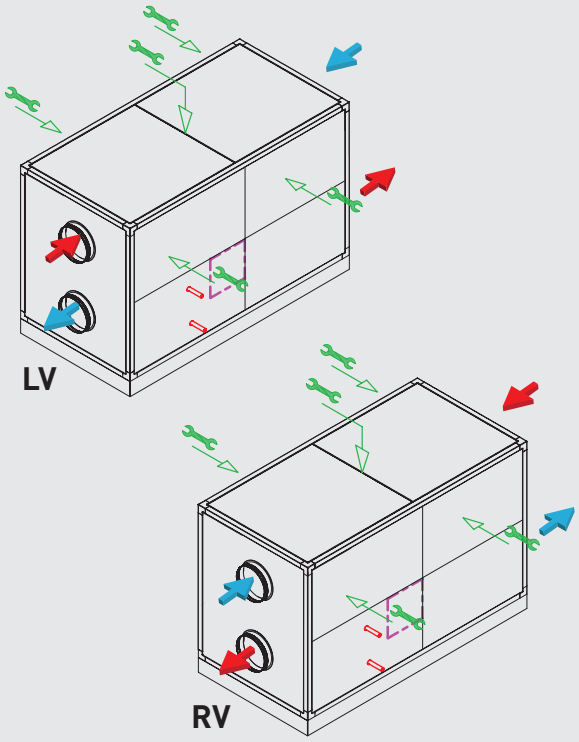

DIMENSIONS (mm)

CADB/T-HE 04 to 21 LH

EXHAUST AIR FRESH AIR

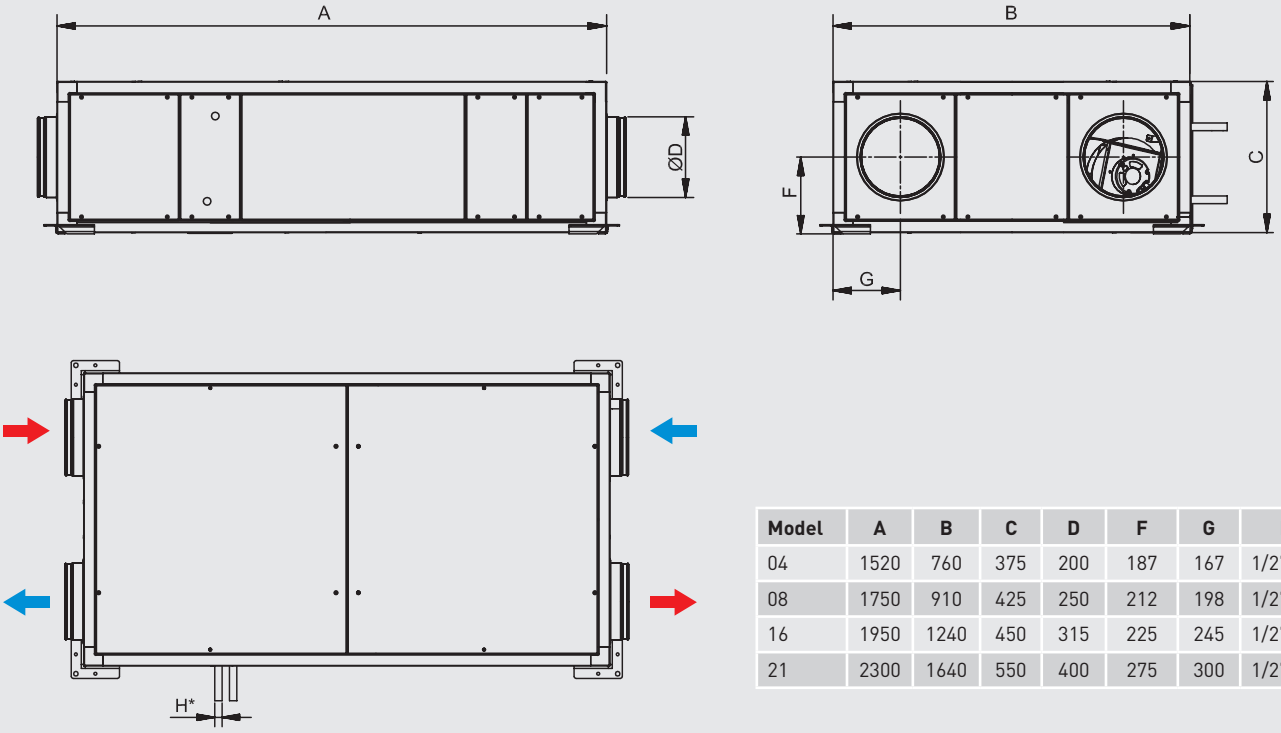

Model	A	B	C	D	F	G	H
04	1520	760	375	200	187	167	1/2" GM
08	1750	910	425	250	212	198	1/2" GM
16	1950	1240	450	315	225	245	1/2" GM
21	2300	1640	550	400	275	300	1/2" GM

CADB/T-HE 04 to 21 RH

EXHAUST AIR FRESH AIR

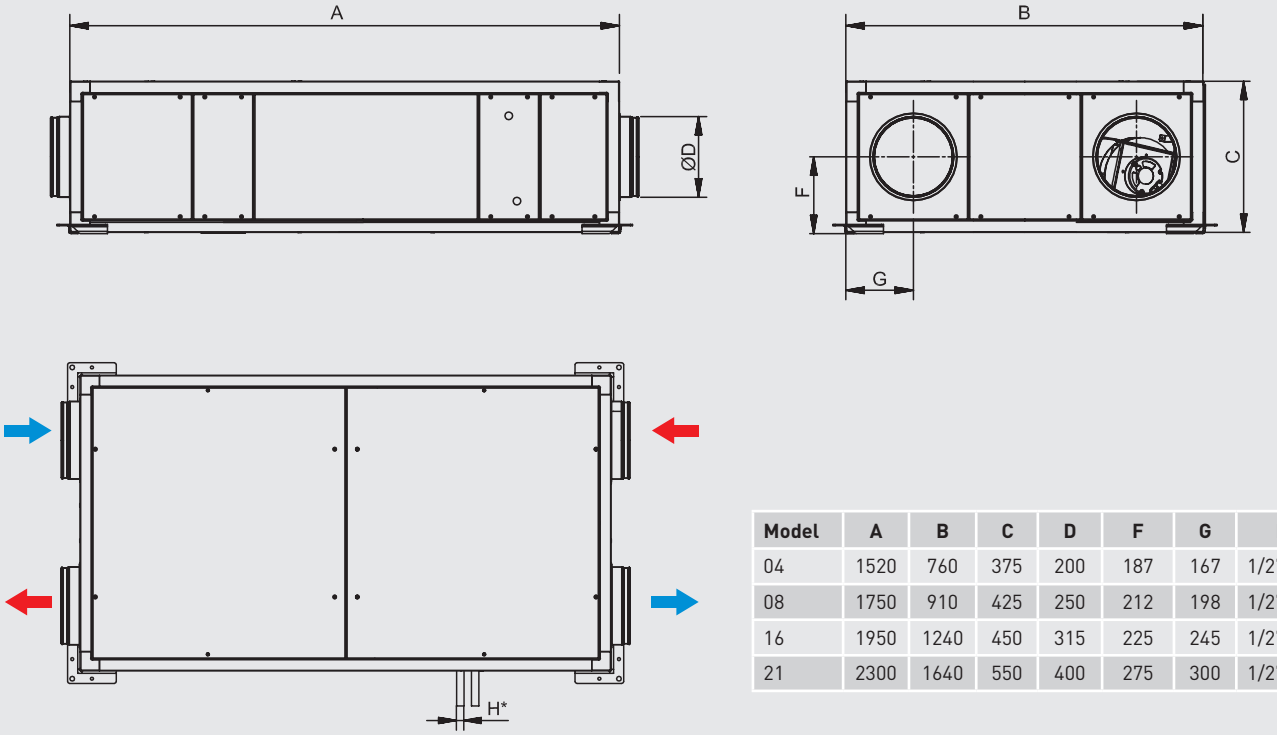

Model	A	B	C	D	F	G	H
04	1520	760	375	200	187	167	1/2" GM
08	1750	910	425	250	212	198	1/2" GM
16	1950	1240	450	315	225	245	1/2" GM
21	2300	1640	550	400	275	300	1/2" GM

DIMENSIONS (mm)

CADB/T-HE 40 and 54 LH

EXHAUST AIR FRESH AIR

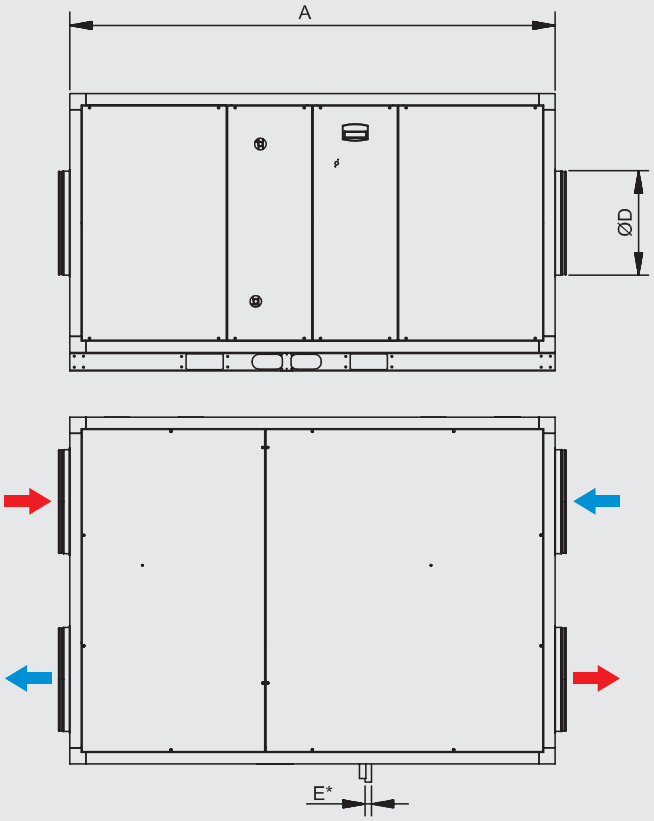

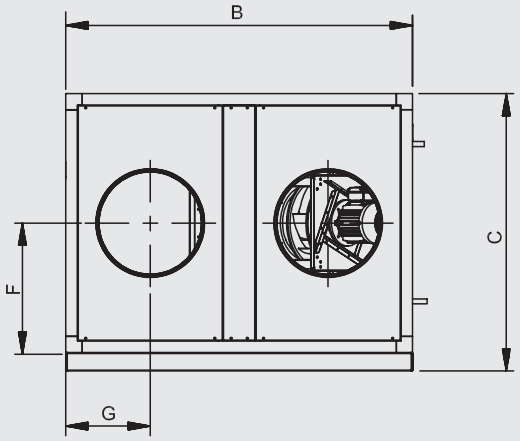

Model	A	B	C	D	E	F	G
40	2100	1500	1200	450	3/4"GM	640	364
54	2250	1550	1580	500	3/4"GM	830	324

CADB/T-HE 40 and 54 RH

EXHAUST AIR FRESH AIR

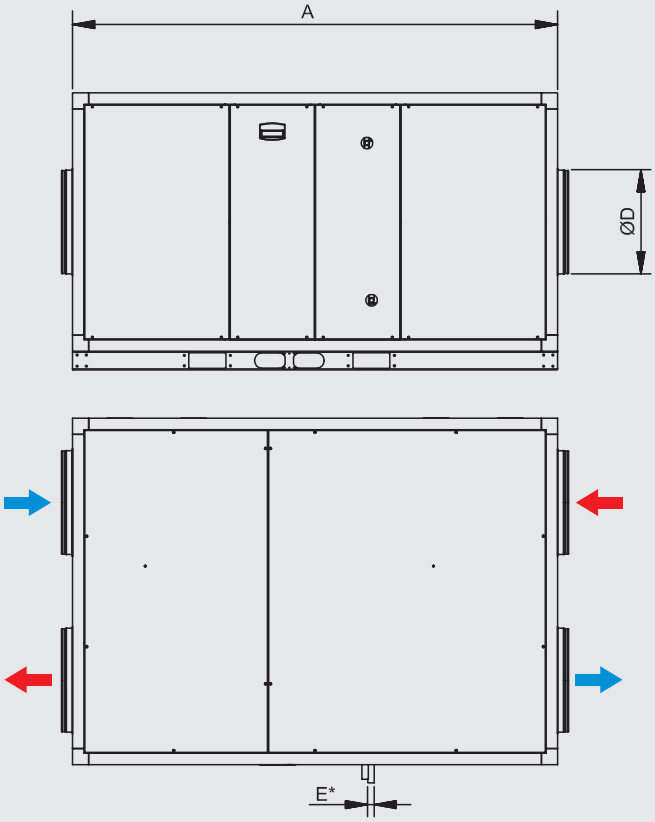

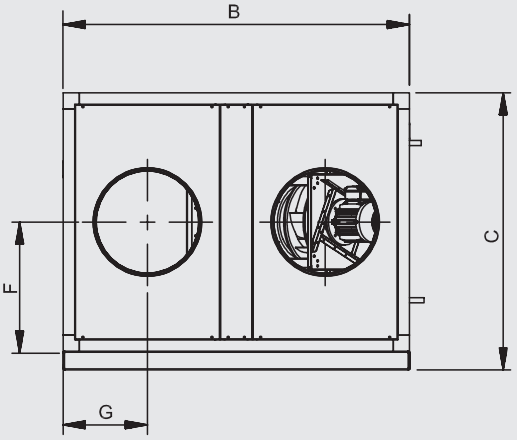

Model	A	B	C	D	E	F	G
40	2100	1500	1200	450	3/4"GM	640	364
54	2250	1550	1580	500	3/4"GM	830	324

DIMENSIONS (mm)

CADB/T-HE 40 and 54 LV

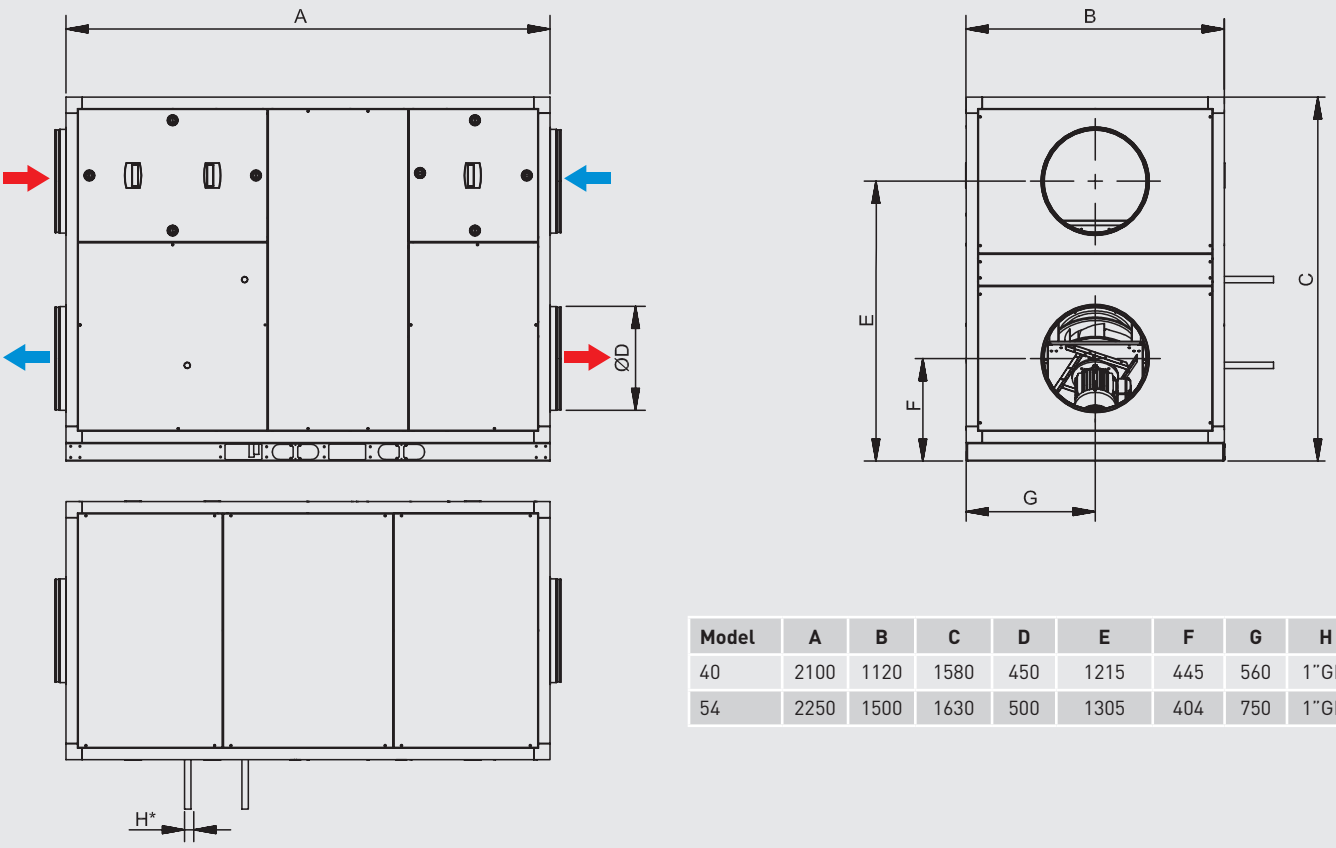

Model	A	B	C	D	E	F	G	H
40	2100	1120	1580	450	1215	445	560	1"GM
54	2250	1500	1630	500	1305	404	750	1"GM

CADB/T-HE 40 and 54 RV

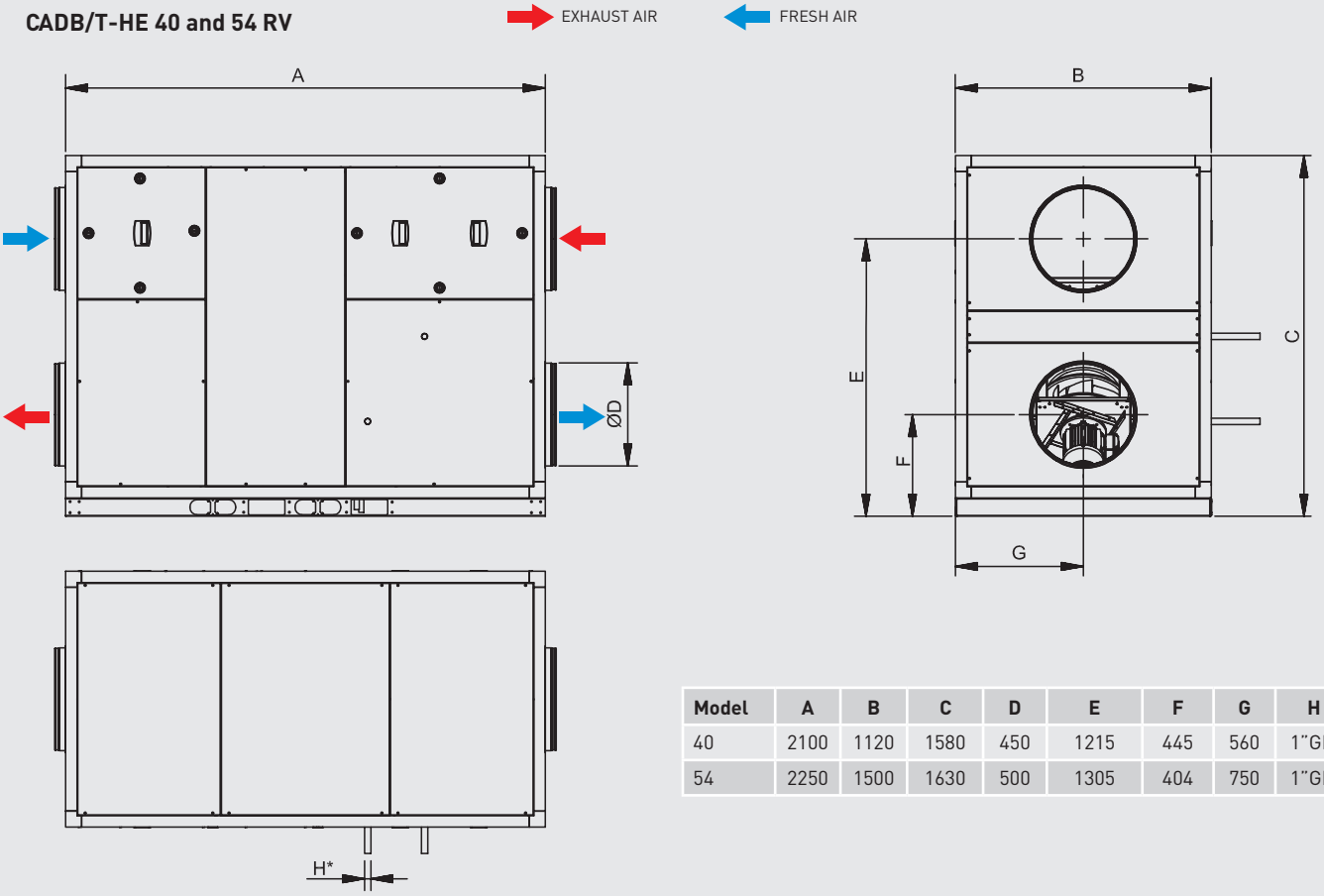

Model	A	B	C	D	E	F	G	H
40	2100	1120	1580	450	1215	445	560	1"GM
54	2250	1500	1630	500	1305	404	750	1"GM

PERFORMANCE CURVES

- q_v: Airflow in m³/h.
- p_{sf}: Static pressure in Pa.
- Pabs: Absorbed power at maximum speed (W).
- Dry air at 20ºC and 760 mmHg.
- Performance data in accordance with ISO 5801 and AMCA 210-99 Standards.

CADB-HE-D 04

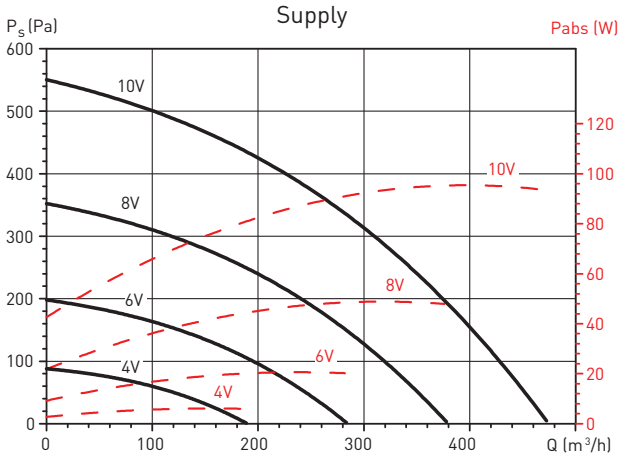

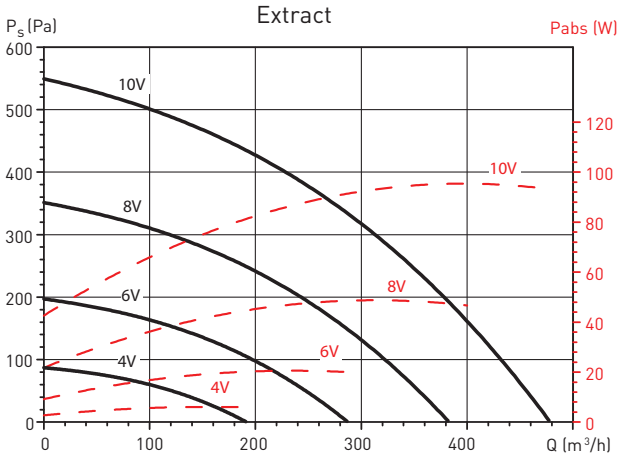

CADB-HE-DC 04

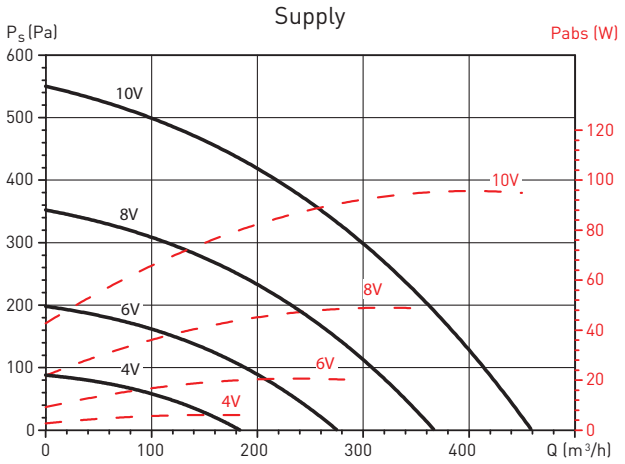

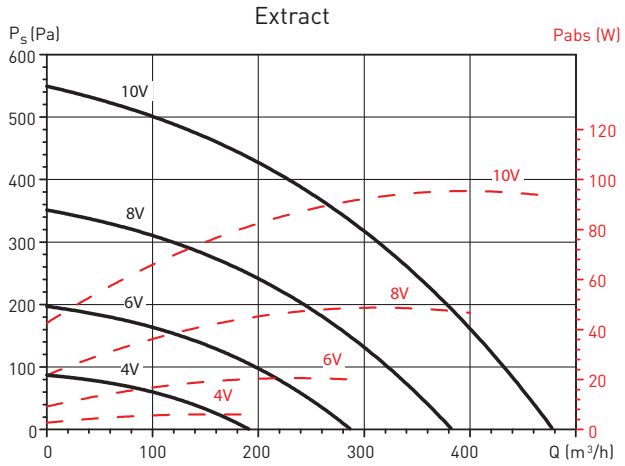

CADB-HE-DI 04

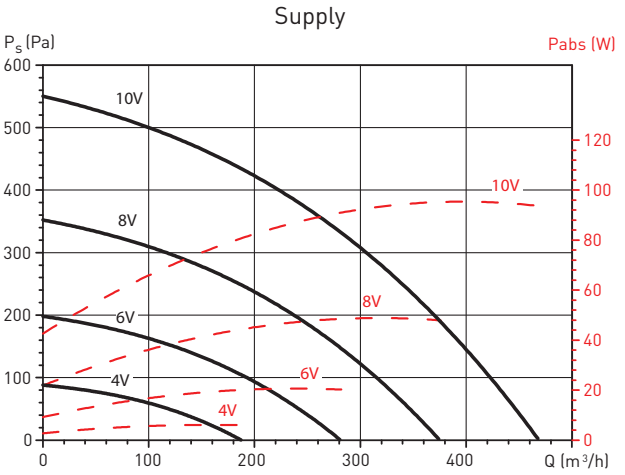

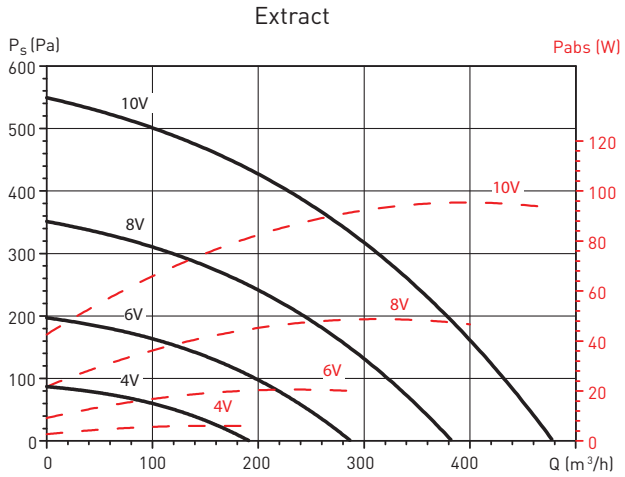

PERFORMANCE CURVES

- q_v: Airflow in m³/h.
- p_{sf}: Static pressure in Pa.
- Pabs: Absorbed power at maximum speed (W).
- Dry air at 20ºC and 760 mmHg.
- Performance data in accordance with ISO 5801 and AMCA 210-99 Standards.

CADB-HE-D 08

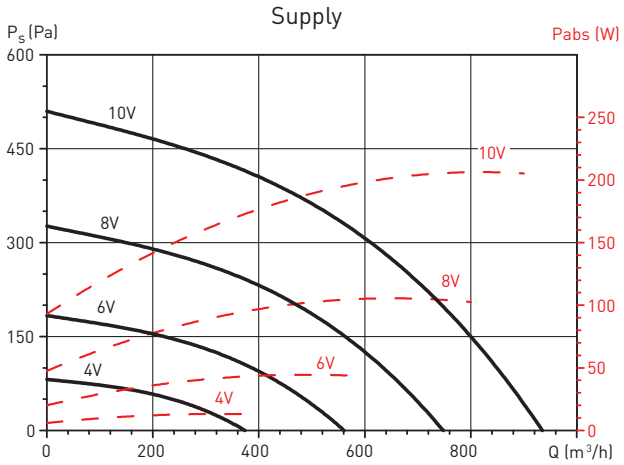

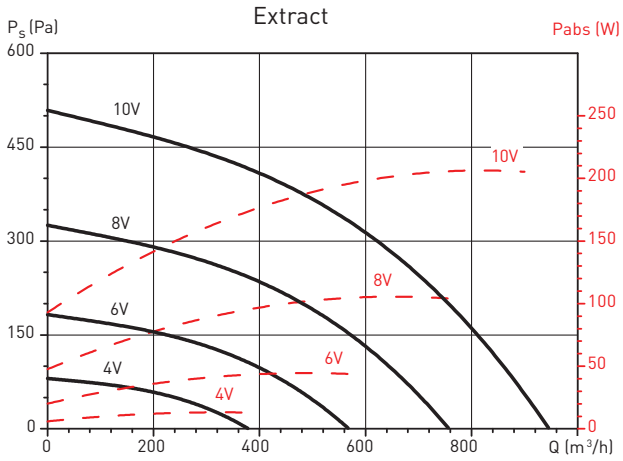

CADB-HE-DC 08

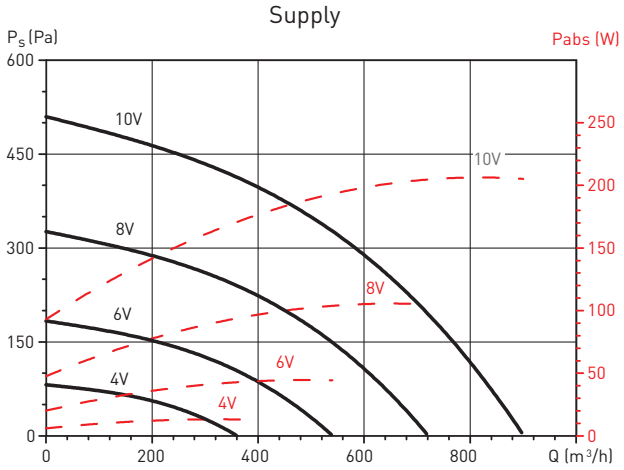

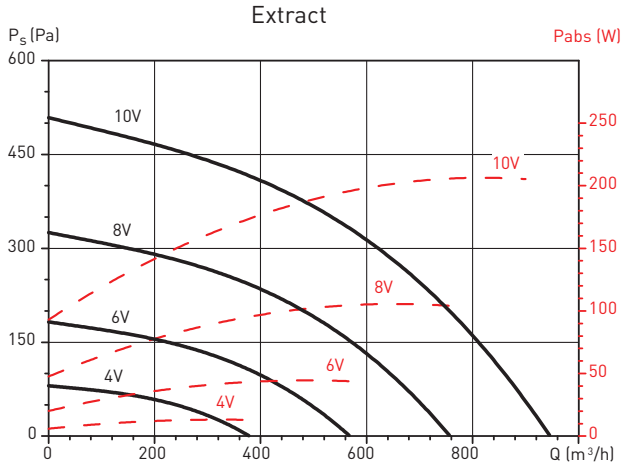

CADB-HE-DI 08

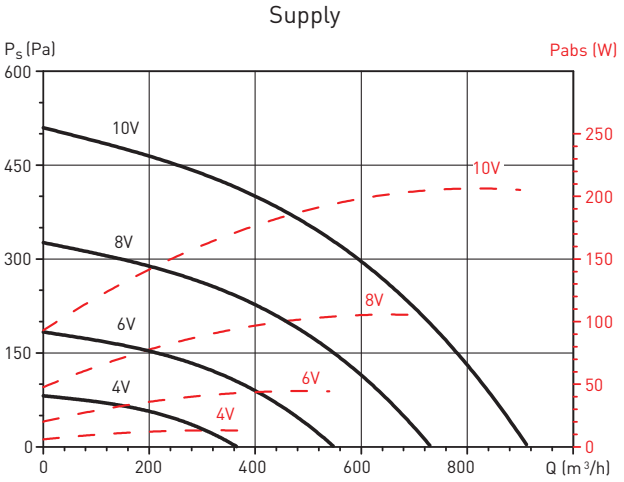

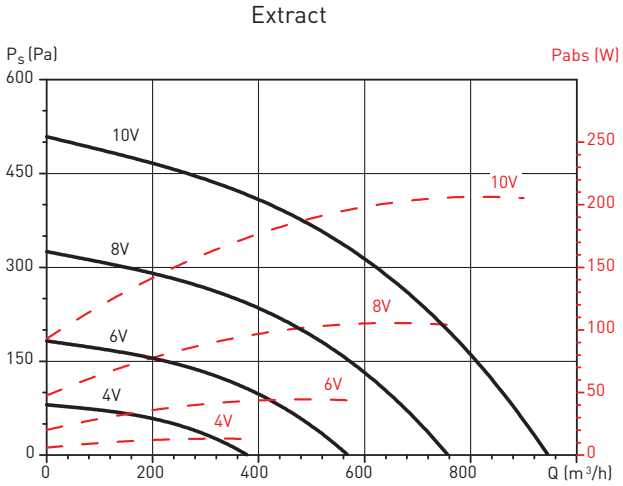

PERFORMANCE CURVES

- q_v: Airflow in m³/h.
- p_{sf}: Static pressure in Pa.
- Pabs: Absorbed power at maximum speed (W).
- Dry air at 20ºC and 760 mmHg.
- Performance data in accordance with ISO 5801 and AMCA 210-99 Standards.

CADB-HE-D 16

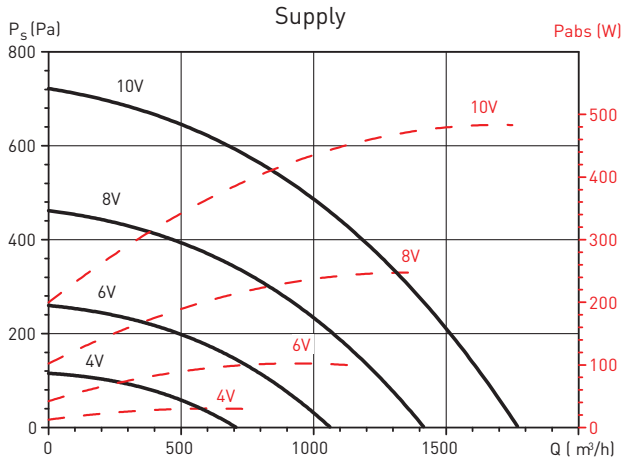

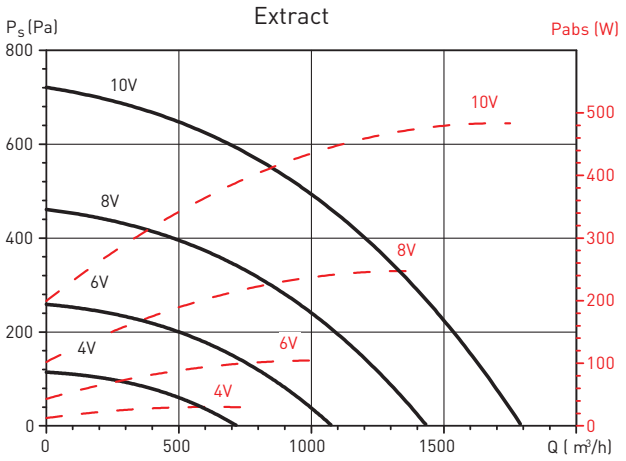

CADB-HE-DC 16

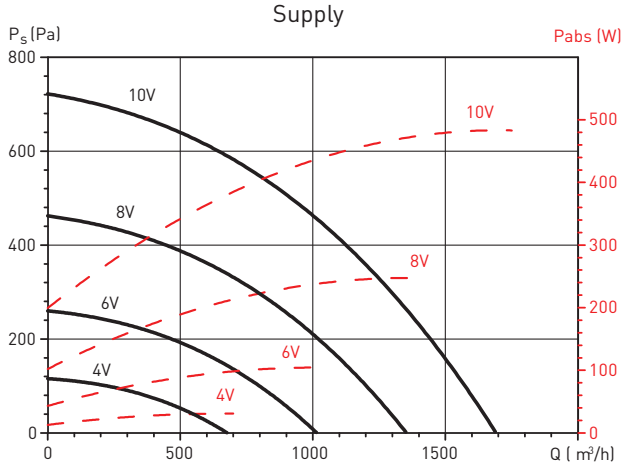

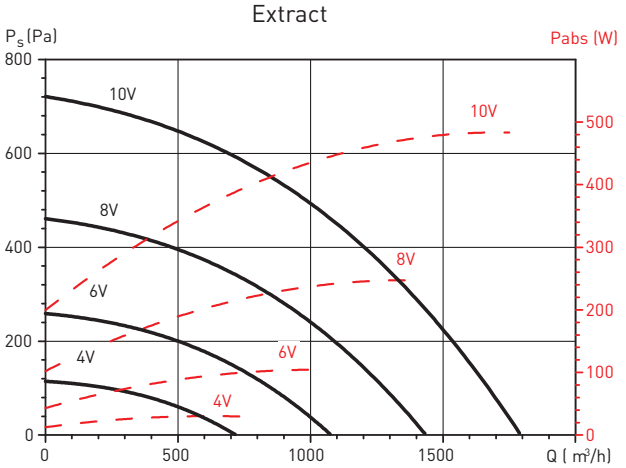

CADB-HE-DI 16

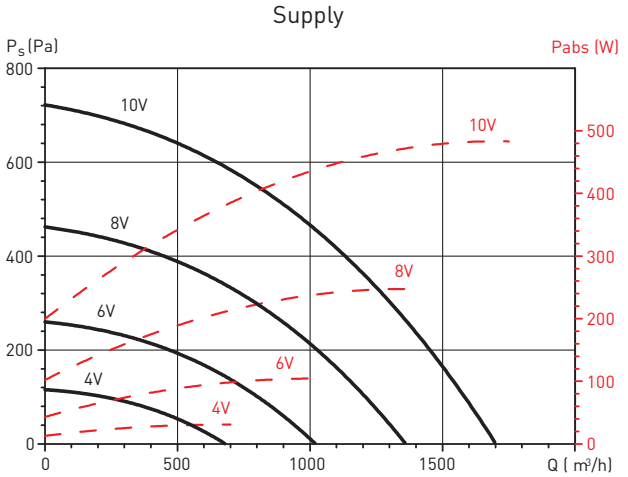

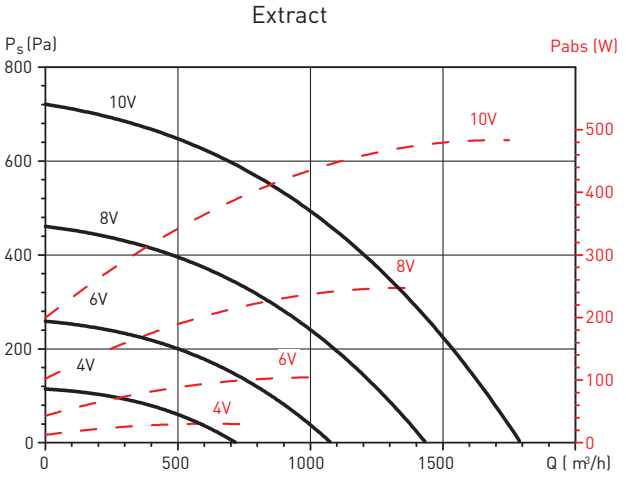

PERFORMANCE CURVES

- q_v: Airflow in m³/h.
- p_{sf}: Static pressure in Pa.
- Pabs: Absorbed power at maximum speed (W).
- Dry air at 20ºC and 760 mmHg.
- Performance data in accordance with ISO 5801 and AMCA 210-99 Standards.

CADB-HE-D 21

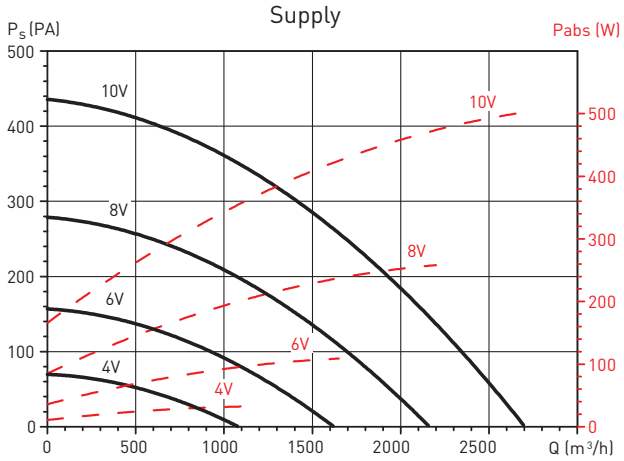

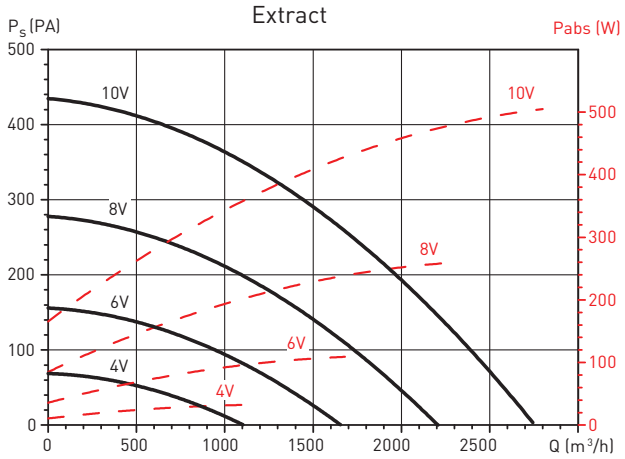

CADB-HE-DC 21

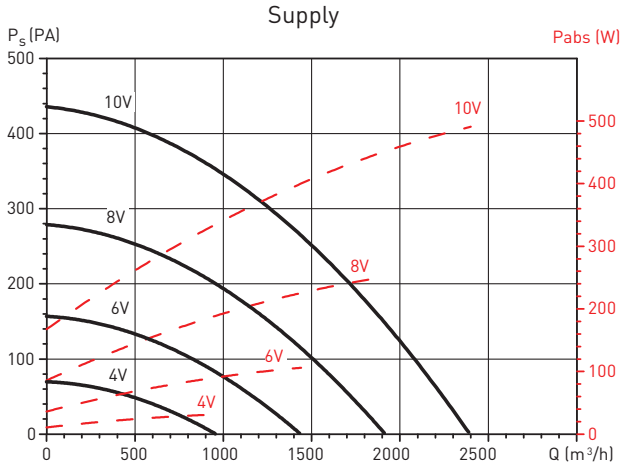

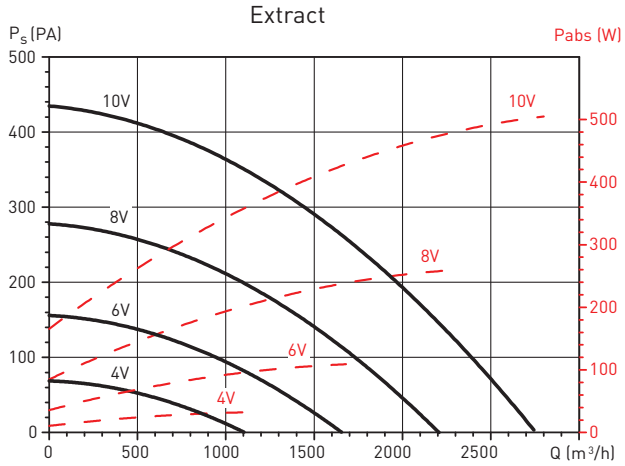

CADT-HE-DI 21

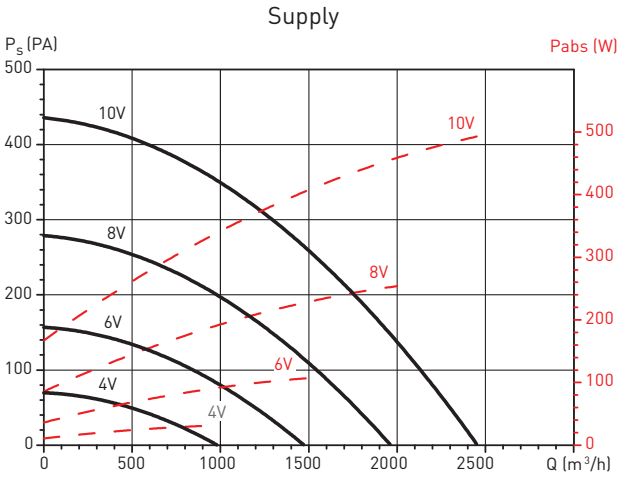

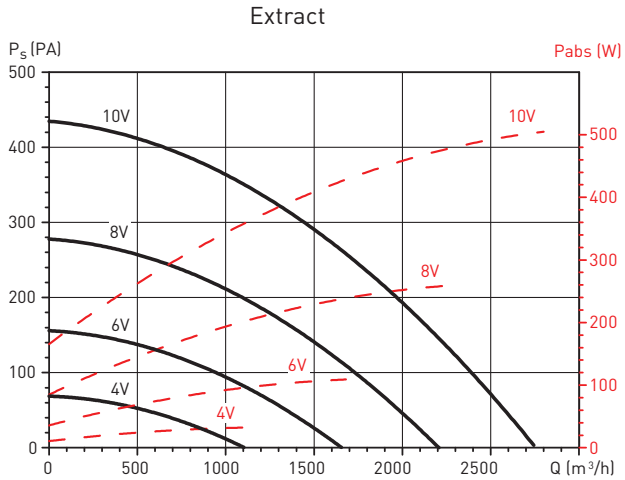

PERFORMANCE CURVES

- q_v: Airflow in m³/h.
- p_{sf}: Static pressure in Pa.
- Pabs: Absorbed power at maximum speed (W).
- Dry air at 20ºC and 760 mmHg.
- Performance data in accordance with ISO 5801 and AMCA 210-99 Standards.

CADB-HE-D 40

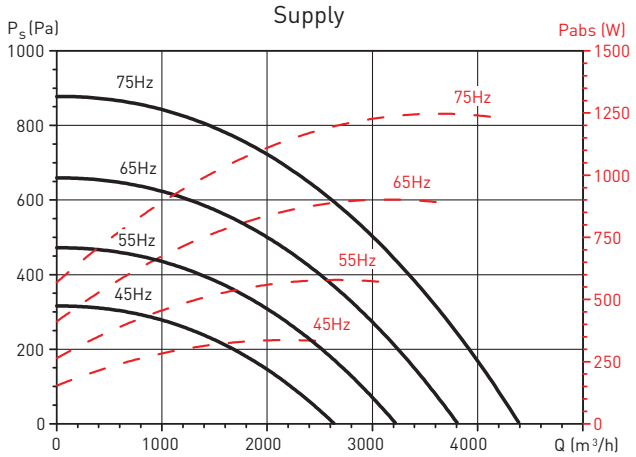

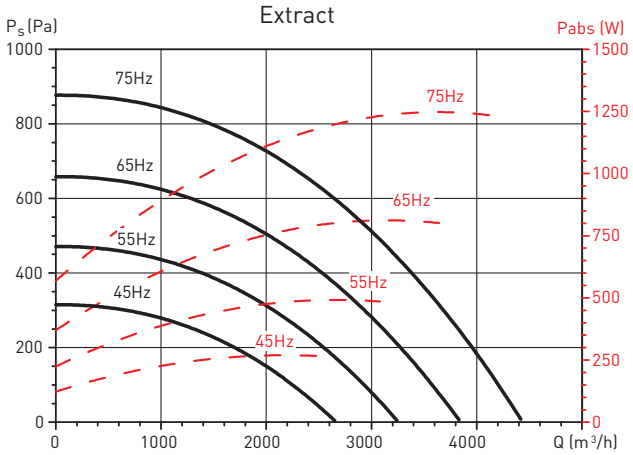

CADB-HE-DC 40

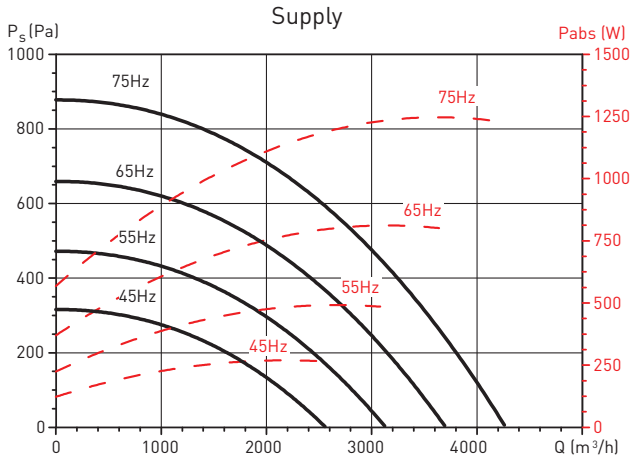

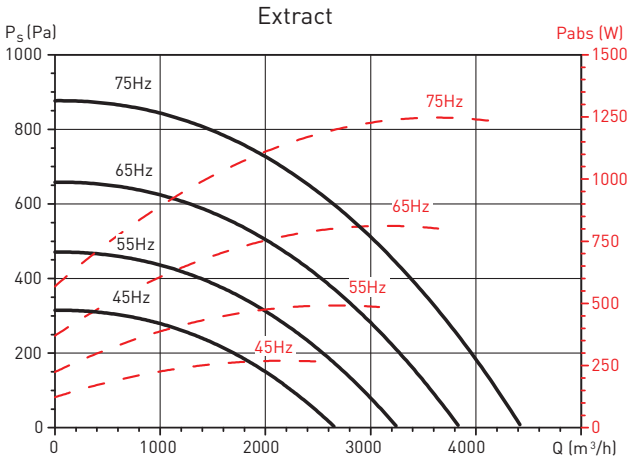

CADT-HE-DI 40

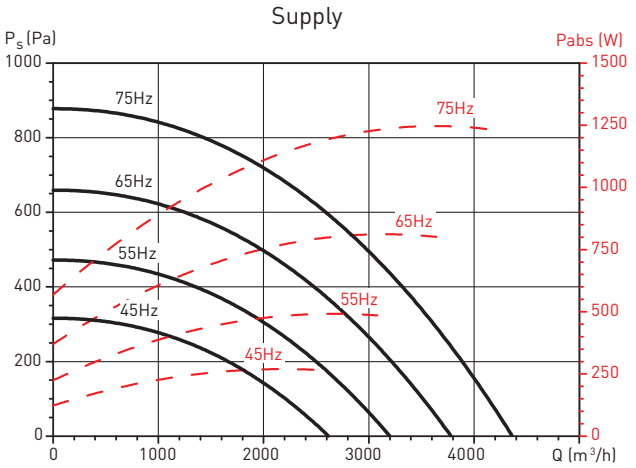

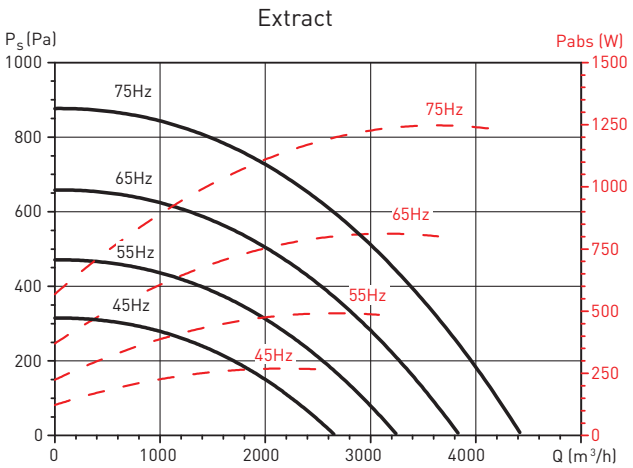

PERFORMANCE CURVES

- q_v: Airflow in m³/h.
- p_{sf}: Static pressure in Pa.
- Pabs: Absorbed power at maximum speed (W).
- Dry air at 20ºC and 760 mmHg.
- Performance data in accordance with ISO 5801 and AMCA 210-99 Standards.

CADB-HE-D 54

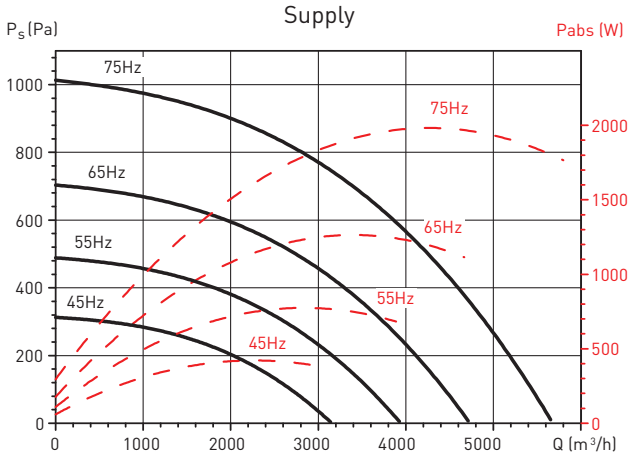

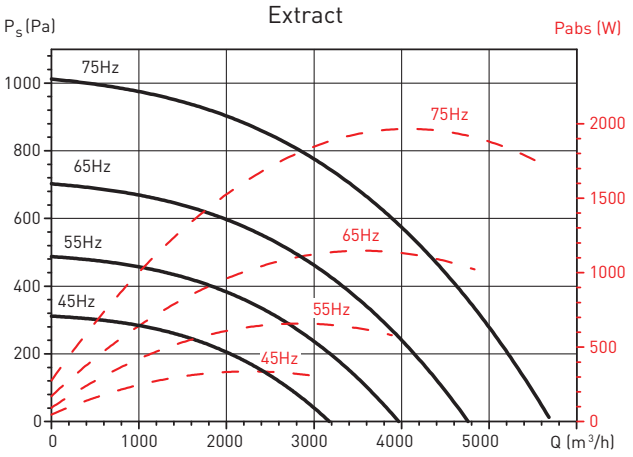

CADB-HE-DC 54

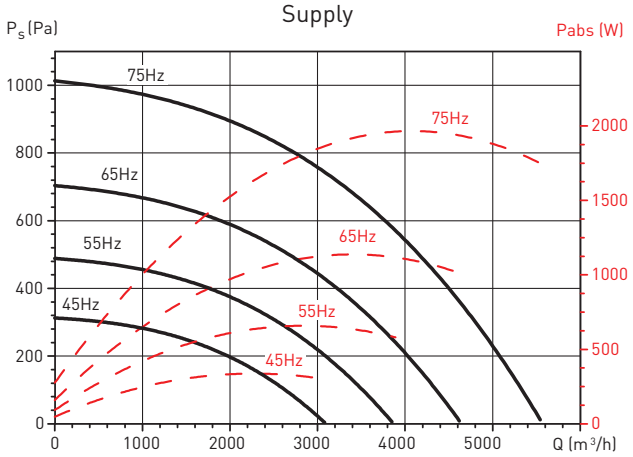

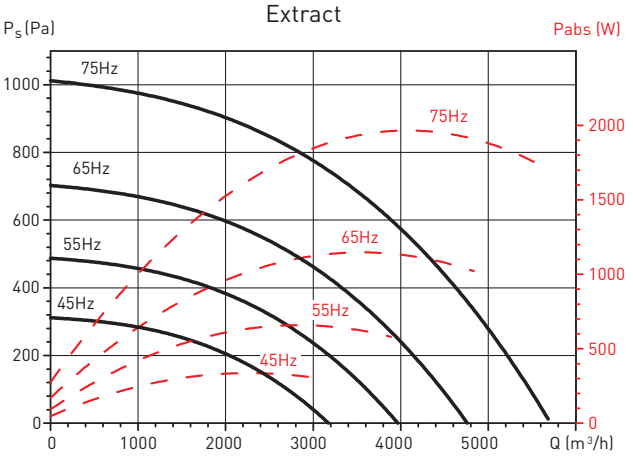

CADT-HE-DI 54

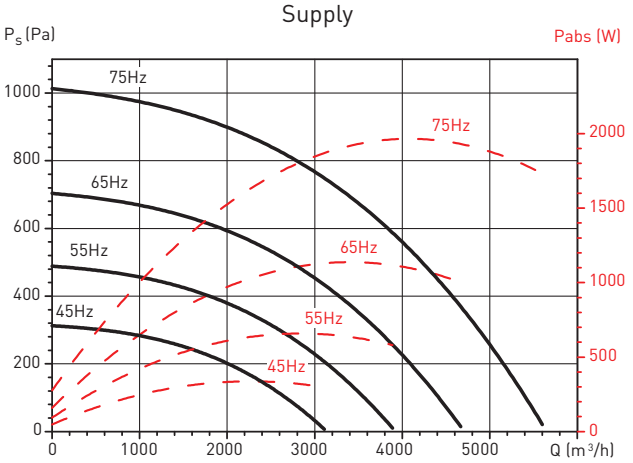

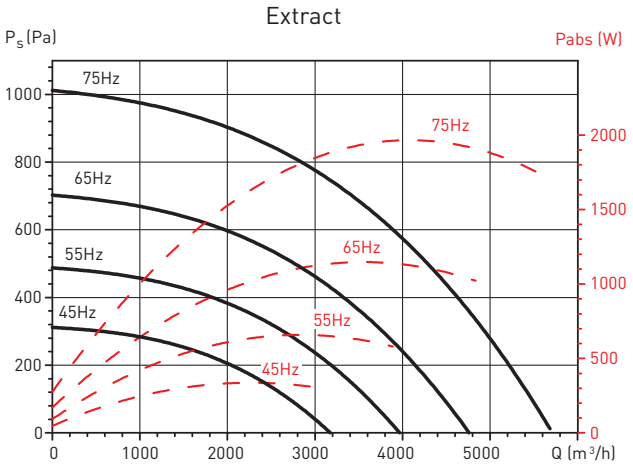

MOUNTING ACCESSORIES TABLE

For more information see "Heat recovery accessories" and/or "Mounting accessories".
Mounting accessories supplied in unpainted galvanized sheet.

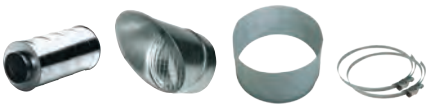

Model	Ø (mm)	AFR-HE (spare filter for CADB/T-HE)				SIL Circular sound attenuators	APC Inlet/outlet protection guards	Circular flexible connector
		AFR-HE G4	AFR-HE M5	AFR-HE F7	AFR-HE F9			
CADB-HE D/DI/DC 04	200	AFR-HE 200/04 G4	AFR-HE 200/04 M5	AFR-HE 200/04 F7	AFR-HE 200/04 F9	SIL-200	APC-200	ACOPEL F400-200/160N
CADB-HE D/DI/DC 08	250	AFR-HE 250/08 G4	AFR-HE 250/08 M5	AFR-HE 250/08 F7	AFR-HE 250/08 F9	SIL-250	APC-250	ACOPEL F400-250/160N
CADB-HE D/DI/DC 16	315	AFR-HE 315/16 G4	AFR-HE 315/16 M5	AFR-HE 315/16 F7	AFR-HE 315/16 F9	SIL-315	APC-315	ACOPEL F400-315/160N
CADB/T-HE D/DI/DC 21	400	AFR-HE 400/21 G4	AFR-HE 400/21 M5	AFR-HE 400/21 F7	AFR-HE 400/21 F9	SIL-400	APC-400	ACOPEL F400-400/160N
CADB/T-HE D/DI/DC 40	450	AFR-HE 450/40 G4	AFR-HE 450/40 M5	AFR-HE 450/40 F7	AFR-HE 450/40 F9	SIL-450	APC-450	ACOPEL F400-450/160N
CADB/T-HE D/DI/DC 54	500	AFR-HE 500/54 G4	AFR-HE 500/54 M5	AFR-HE 500/54 F7	AFR-HE 500/40 F9	SIL-500	APC-500	ACOPEL F400-500/160N

MOUNTING ACCESSORIES

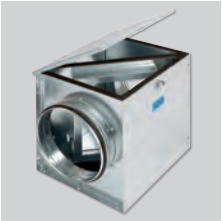

FBL-N
Filtration box, provided without filters, to mount AFR-N filters
(2 as a maximum).
Suitable to mount outdoors.
Manufactured in galvanized steel.
Circular flanges with air tight spigot seals.
Cover easily removable to quickly replace the filter.

Model	Ø (mm)	Accessory and replacement filters for FBL-HE y CADB/T-HE			
		AFR-HE G4	AFR-HE M5	AFR-HE F7	AFR-HE F9
FBL-04 HE	200	AFR-HE 200/04 G4	AFR-HE 200/04 M5	AFR-HE 200/04 F7	AFR-HE 200/04 F9
FBL-08 HE	250	AFR-HE 250/08 G4	AFR-HE 250/08 M5	AFR-HE 250/08 F7	AFR-HE 250/08 F9
FBL-16 HE	315	AFR-HE 315/16 G4	AFR-HE 315/16 M5	AFR-HE 315/16 F7	AFR-HE 315/16 F9
FBL-21 HE	400	AFR-HE 400/21 G4	AFR-HE 400/21 M5	AFR-HE 400/21 F7	AFR-HE 400/21 F9
FBL-40 HE	450	AFR-HE 450/40 G4	AFR-HE 450/40 M5	AFR-HE 450/40 F7	AFR-HE 450/40 F9
FBL-54 HE	500	AFR-HE 500/54 G4	AFR-HE 500/54 M5	AFR-HE 500/54 F7	AFR-HE 500/40 F9

TPP-N

Rain protection cowl
Rain protection cowls are supplied with a finish of galvanized sheet without painting.

Heat recovery unit model	Rain protection cowl model	
	Horizontal (LH / RH)	Vertical (LV / RV)
CADB-HE D/DI/DC 04	TPP-HE-H 04	-
CADB-HE D/DI/DC 08	TPP-HE-H 08	-
CADB-HE D/DI/DC 16	TPP-HE-H 16	-
CADB/T-HE D/DI/DC 21	TPP-HE-H 21	-
CADB/T-HE D/DI/DC 40	TPP-HE-H 40	TPP-HE-V 40
CADB/T-HE D/DI/DC 54	TPP-HE-H 54	TPP-HE-V 54

ELECTRICAL ACCESSORIES TABLE

Control elements needed to regulate the fan-speed (for -D, -DC, -DI versions)

Model	Accessories for VAV via CO2		Accessories for COP		Accessories for CAV	
	Inverter	Probe	Inverter	Probe	Electronic speed control	Inverter
CADB-HE D/DI/DC 04	CONTROL AERO-REG	SC02-A 0-10V / SC02-AD 0-10V / SC02-G 0-10/V	CONTROL AERO-REG**	TDP-D *	REB-ECOWATT**	-
CADB-HE D/DI/DC 08	CONTROL AERO-REG	SC02-A 0-10V / SC02-AD 0-10V / SC02-G 0-10/V	CONTROL AERO-REG**	TDP-D *	REB-ECOWATT**	-
CADB-HE D/DI/DC 16	CONTROL AERO-REG	SC02-A 0-10V / SC02-AD 0-10V / SC02-G 0-10/V	CONTROL AERO-REG**	TDP-D *	REB-ECOWATT**	-
CADB/T-HE D/DI/DC 21	CONTROL AERO-REG	SC02-A 0-10V / SC02-AD 0-10V / SC02-G 0-10/V	CONTROL AERO-REG**	TDP-D *	REB-ECOWATT**	-
CADB/T-HE D/DI/DC 40	INCLUDED	SC02-A 0-10V / SC02-AD 0-10V / SC02-G 0-10/V	INCLUDED	TDP-D *	-	INCLUDED
CADB/T-HE D/DI/DC 54	INCLUDED	SC02-A 0-10V / SC02-AD 0-10V / SC02-G 0-10/V	INCLUDED	TDP-D *	-	INCLUDED

*To independently control the workpoint of each circuit, the supply and extract fans should be controlled via inverter and pressure probe. In case of frequency converters, these could have half the power than the ones shown in the table.

**To independently control the workpoint of each circuit, the supply and extract fans should be controlled via corresponding electronic regulator.

Specific control elements for DC versions

Model	Accessories for battery control		
	Valve	Thermostat	Inverter 230V/24V
CADB-HE-DC 04	3WV DN 15 KVS1 PROP 24V	WCT	TRAFO 15-D
CADB-HE-DC 08	3WV DN 15 KVS1,6 PROP 24V	WCT	TRAFO 15-D
CADB-HE-DC 16	3WV DN 15 KVS2,5 PROP 24V	WCT	TRAFO 15-D
CADB-HE-DC 21	3WV DN 20 KVS4 PROP 24V	WCT	TRAFO 15-D
CADB-HE-DC 40	3WV DN 25 KVS6,3 PROP 24V	WCT	TRAFO 15-D
CADB-HE-DC 54	3WV DN 25 KVS10 PROP 24V	WCT	TRAFO 15-D

Specific control elements for DI versions

Model	Supply power	Power (kW)	Stages	Current (A)	Inverter	Temperature probe		External potentiometer	Pressure switch	Timer
						Inline	Ambient			
CADB-HE-DI 04	Mono 230V	1,0	2	4,5	Pulser	TG-K330	TG-R530	TBI-30	DPS 2.30	MCR-1
CADB-HE-DI 08	Mono 230V	2	2	9,1	Pulser	TG-K330	TG-R530	TBI-30	DPS 2.30	MCR-1
CADB-HE-DI 16	Mono 230V	3,5	2	15,9	Pulser	TG-K330	TG-R530	TBI-30	DPS 2.30	MCR-1
CADT-HE-DI 21	Tri 400V	6	2	9,11	TTC-25	TG-K330	TG-R530	TBI-30	DPS 2.30	MCR-1
CADT-HE-DI 40	Tri 400V	9	2	13,7	TTC-25	TG-K330	TG-R530	TBI-30	DPS 2.30	MCR-1
CADT-HE-DI 54	Tri 400V	12	2	18,2	TTC-25	TG-K330	TG-R530	TBI-30	DPS 2.30	MCR-1

External coils

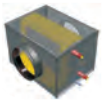

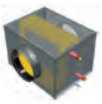


Model	External coils			
	BA-AF (Reversible cold water 2 tubes)	BA-AC-N (Hot water)	BA-AFC (Cold and hot watercoil, 4 tubes)	BA-DX (Direct expansion coil)
CADB-HE D/DI/DC 04	BA-AF 04 HE R/L	BA-AC 04 HE R/L	BA-AFC 04 HE R/L	BA-DX 04 HE R/L
CADB-HE D/DI/DC 08	BA-AF 08 HE R/L	BA-AC 08 HE R/L	BA-AFC 08 HE R/L	BA-DX 08 HE R/L
CADB-HE D/DI/DC 16	BA-AF 16 HE R/L	BA-AC 16 HE R/L	BA-AFC 16 HE R/L	BA-DX 16 HE R/L
CADB/T-HE D/DI/DC 21	BA-AF 21 HE R/L	BA-AC 21 HE R/L	BA-AFC 21 HE R/L	BA-DX 21 HE R/L
CADB/T-HE D/DI/DC 40	BA-AF 40 HE R/L	BA-AC 40 HE R/L	BA-AFC 40 HE R/L	BA-DX 40 HE R/L
CADB/T-HE D/DI/DC 54	BA-AF 54 HE R/L	BA-AC 54 HE R/L	BA-AFC 54 HE R/L	BA-DX 54 HE R/L

ELECTRIC ACCESSORIES FOR CADB/T- HE SERIES

CONTROL AERO-REG
Specific accessory to control the heat recovery units without additional incorporated heater equipped with single-phase motor (models CADB/T-HE 04 to 21).
Not suitable for controlling the heat recovery units with built-in electric heater or heat recovery units with built-in hot water coil.
Supplied as an accessory (wiring and installation not included).

Functions:
- On / off
- Regulation manual / automatic fan speed.
- Detection of fouling of filters (it is necessary to install two switches DPS 2.30, not included with the supply of control).
- Detection of damage to the fans (it is necessary to install two switches DPS 2.30, not included with the supply of control).
- ModBus communication

Operation:
- Manual potentiometer: fan speed manual control using the potentiometer located at the top.
- Proportional with entry analog. fan speed control using an external probe CO_2 (accessory) humidity and temperature (0-10V / 4-20mA).
- Proportional Integral PI: pressure control or constant airflow through a differential pressure transmitter TDP-D (accessory) (0-10V / 4-20mA).

Model	Electrical supply	Maximum current (A)	Motors output voltage	IP Protection	Operating temperature range	Dimensions LxWxH (mm)
CONTROL AERO-REG	230 VAC	11	0-10VDC / 110-230VAC	IP55	-10ºC to +50ºC	175x250x120

SCO_2-A 0/10V
Ambient CO_2 and temperature sensor without display.
Output: 0-10V
Power supply: 24VDC

SCO_2-G 0/10V
CO_2 sensor for the duct.
Enables control of the ventilation in sections of duct according to the CO_2 concentration of the air circulating through it.

TDP-D
Pressure sensor.
Enables you to control the pressure in the fan inlet.

REB-ECOWATT
Remote speed control.
Enables the speed control of the fan continuously, manually and remote.

FC-REG
Comparative thermostat that allows the management of the by-pass of a heat recovery unit in free-cooling mode. (Applicable to the CADB/T-N range without integrated control and equipped with by-pass).
It allows opening/closing of the bypass valve of the heat recovery unit on the basis of the temperatures measured by the indoor and outdoors temperature probes.
Limitation of the minimum inlet air temperature adjustable to 8ºC or 12ºC.
Outlet via potential free-contact.
It includes two temperature probes, each one with a cable of 4m.length

Model	Supply		IP Protection	Power (VA)	Current (A)	Setpoint range (ºC)	Maximum ambient temperature (ºC)	Dimensions LxAxH (mm)
	Frequency (Hz)	Voltage (V)						
FC-REG	50	220-240	IP20	6	2	15-30	50	110x74x26

WCT
Thermostat to control the thermal power of hot water coils included in CADB-HE heat recovery units.
It allows to mantain constant supply air temperature. Compatible with proportional actuators (0-10V). It includes temperature probe to install in the duct (4 m. length). It can work in heat or chilling mode, in combination with external batteries BA-AC HE and BA-AFC HE.

	Voltage (V)	Frequency (Hz)	IP Protection	IP Probe	Power (VA)	Output signal	Setpoint range (ºC)	Maximum ambient temperature (Cº)	Dimensions LxWxH (mm)
WCT	24	50	IP-20	IP-68	6	0-10VDC	15-30	50	110x74x26

ELECTRIC ACCESSORIES FOR CADB/T-HE SERIES

3-WAY VALVES WITH PROPORTIONAL ACTUATOR
Three way motorised control valve.
Pressure 16 bar.
Rp" internal nut.
Nickel-plated forged brass casing.
Stainless steel valve cone.
Stainless steel shaft.
Average temperatures -10..+120.
5Nm mounted rotary actuator.
AC/DC 24V, proportional.
90 s/90° valve response time.
DC 2....10V working range.
IP 54, automatic or manual activation.

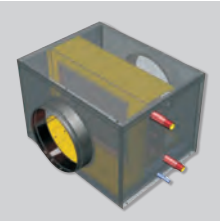

BA-AF HE
External module with reversible cold water coil (2 tubes).

BA-DX HE
Module with direct expansion coil to integrate in (R-410A) networks controlled by external Kits-DX.

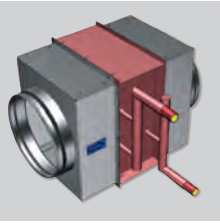

BA-AC HE
External module with reversible hot water coil (2 tubes)

BA-AFC HE
External module with independent coils for hot and cold water (4 tubes).

CADB/T-HE 04 to 21

ErP OK

CADB/T-HE 40 and 54

F7 Supply
M5 Extract

FILTERS

Compact heat recovery unit with high-efficiency (up to 93%) counter-flow heat exchanger, EUROVENT certified. The casing is made from plasticised galvanised steel in white. Panels are double skinned with thermo-acoustic flameproof insulation (M0), made from 25mm thick fiberglass, 25mm thickness in false ceiling versions (Models 04 to 21) and 50mm in Outdoor versions (Models 40 and 54). Configurable and airtight supply and exhaust spigots, suitable for horizontal installation.

Applications
Commercial premises, offices, restaurants, public buildings, schools.

CADB-HE D PRO-REG
Heat recovery units without additional incorporated heater.

CADB/T-HE DI PRO-REG
Heat recovery units with built-in electric heater battery.

CADB-HE DC PRO-REG
Heat recovery units with built-in hot water coil.

The 3-Way valve is provided as an accessory (see accessories table for this series)

Motors
Models 04 to 21: EC motors with integrated electronic protection, IP44, Class B.
Models 40 and 54: Three phase motors, IP55, Class F.

Fans
Plug-fan with backward curved impeller.
All fans installed in CADB/T- HE PRO-REG models, comply with the efficiency requirements of the ErP Directive

Filters
- F7: Low pressure F7 filters for supply air.
-M5: M5 filters for extract air.

Control
It includes manual or automatic control for modes: adjustable airflow (VAV), constant pressure (COP) or constant airflow (CAV), via CO_2, pressure or airflow sensors (accessories). Post-heating stage versions (-DI/-DC) allow post-heating management depending on the temperatures taken by the temperature probes incorporated in the design.

Ranges of product according to the type of operating control:
VAV- variable air volume
Fan speed can be adjusted with a 0 - 10V signal from the remote touchscreen panel (included) or an external CO_2, temperature or humidity sensor (accessories).
CAV - constant air volume
Manual pre-setting of 2 working points the fans are controlled separately. It is necessary to add two pressure sensors TDP-S as external accessory.
COP - constant pressure
Constant pressure measured by an external pressure sensor TDP-S (accessory). It is necessary to add a pressure sensor TDP-S as an external accessory*.
* To control supply and extract air separately it is necessary to install 2 pressure sensors TDP-S.

Additional information
Single phase (CADB-HE PRO-REG) and three phase models (CADT-HE PRO-REG).
Airflows from 400 to 5400 m^3/h at 150 Pa of static pressure available.
All versions and models include by-pass.
Mounting flexibility provided by the interchangeable side panels.

Versions

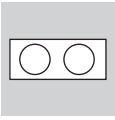

HORIZONTAL CONFIGURATION

WITHOUT ADDITIONAL HEAT

ELECTRIC BATTERY INCLUDED

WATER COIL INCLUDED

PLUG & PLAY

Full controls package integrated

REVIT BIM LEVEL2

REVIT models available for all sizes and configurations

AUTODESK REVIT

Remote control panel
Maximum wire distance 50 m.
Connection wire not included.

Security switch
All versions include a On/Off security device.

MODELS CADB/T-HE 04 TO 21 PRO-REG

Low noise level and robust construction
Casing with double skinned 25 mm panels with thermoacoustic flameproof insulation M0, with high-quality finish and plastic corners.

PRO-REG Controller
Mounted in an IP54 weatherproof electrical box.

High-efficiency motors
Incorporating Plug-fans with EC single-phase motor.

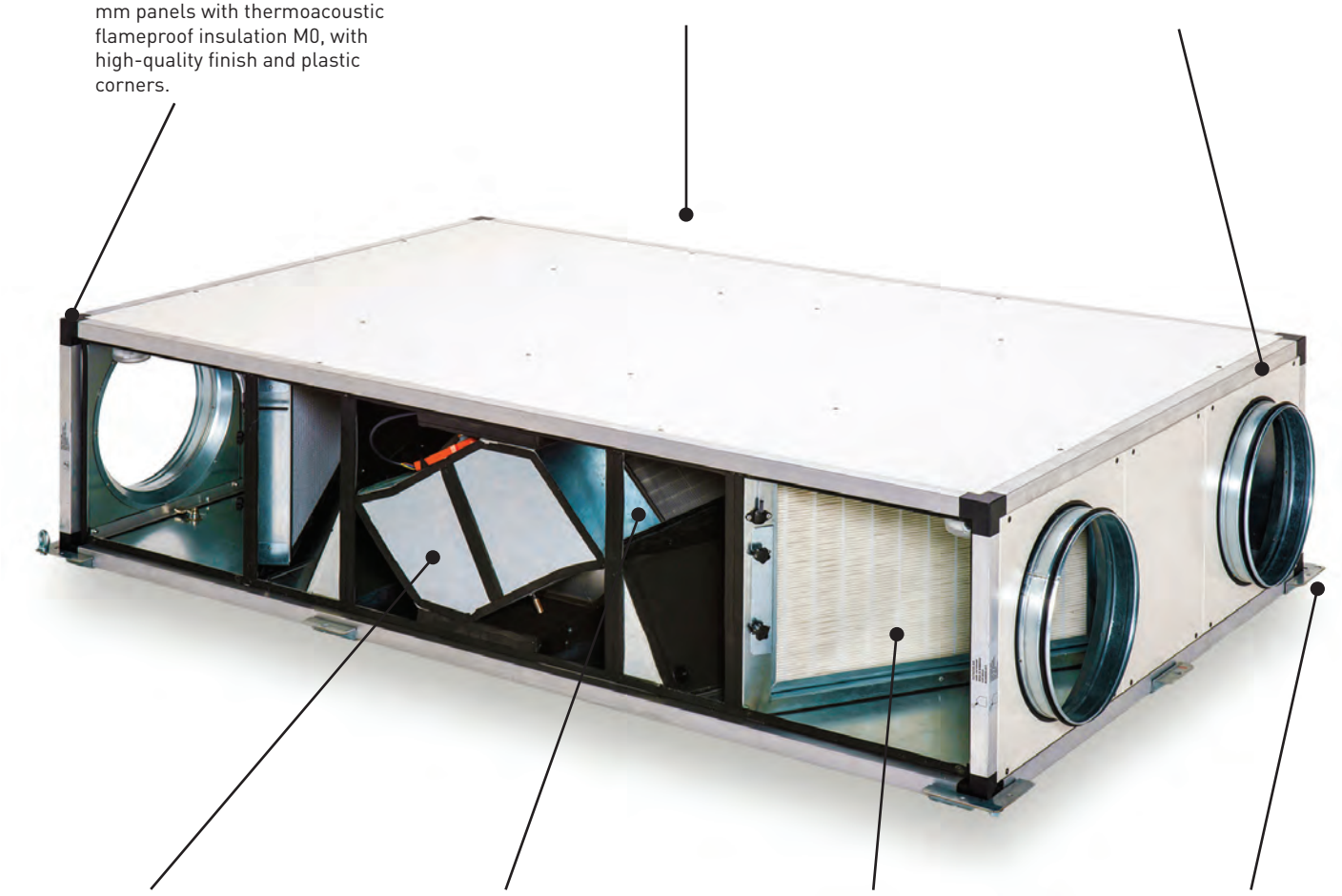

Bypass
All versions include internal bypass (approximately 75% airflow).

Counterflow heat exchanger
high-efficiency (up to 93%), EUROVENT certified.

High-efficiency filters
-F7 Filters: Low pressure F7 filters for supply air.
-M5 Filters: M5 filters for extract air. Possibility of mounting a second filter (accessory)

Support
Specific supports to allow installation in false ceilings via threaded rods.

MODELS CADB/T-HE 40 AND 54 PRO-REG

High-efficiency filters
-F7 Filters: Low pressure F7 filters for supply air.
-M5 Filters: M5 filters for extract air. Possibility of mounting a second filter (accessory)

Low noise level and robust construction
Casing with 50mm. profiles structure with double skinned panels with thermoacoustic flameproof insulation M0, with high-quality finish and plastic corners.

Bypass
All versions include internal bypass (approximately 75% airflow)

PRO-REG Controller
Mounted inside the unit, whatprovide grade IP55 weatherproof.

Structural base
It provides a high rigidity and allows the easy levelling of the unit in outdoor installations.

Counterflow heat exchanger
of high-efficiency (up to 93%), EUROVENT certified.

Motors
Plug-fans with AC three-phase motor, powered by frequency Inverter .

HIGHEST FLEXIBILITY




Versatile assembly
The design of our heat recovery units makes it possible for the user to configure them on site. Panels are interchangeable (except the control panel), which makes it possible to change the position of inlet and outlet connections directly on site, depending on the specific requirements.

Multiple possibilities for exchanging the panels


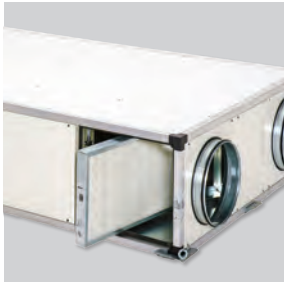

Easy maintenance
Models 04 to 54: easy access to filters from side panels.


Easy maintenance
Models 04 to 21: easy access to filters from bottom panels.



Models 04 to 21: Easy access for cleaning the exchanger from side and bottom panels. Disassembly required.
Models 40 and 54: Easy access for cleaning the exchanger from side panels.

REFERENCE

C A D B - HE	D I	16	LH	PRO-REG
1	2	3	4	5

1 - Series:
CADB-HE: Single-phase
CADT-HE: Three-phase

2 - Heater options:
D: Standard range (no heating)
DI: Range with built-in electric heater battery.
DC: Range with built-in hot water coil.

3 - Size

4 - Type of configuration:
LH: Left horizontal
RH: Right horizontal
LV: Left vertical
RV: Right vertical

5 - PRO-REG: Control Plug & Play PRO-REG included.

STANDARD VERSIONS CADB/T-HE PRO-REG

Without battery

CADB-HE	-D	04	LH	PRO-REG
CADB-HE	-D	08	LH	PRO-REG
CADB-HE	-D	16	LH	PRO-REG
CADB-HE	-D	21	LH	PRO-REG
CADB-HE	-D	40	LH	PRO-REG
CADB-HE	-D	54	LH	PRO-REG

CADB-HE	-D	04	RH	PRO-REG
CADB-HE	-D	08	RH	PRO-REG
CADB-HE	-D	16	RH	PRO-REG
CADB-HE	-D	21	RH	PRO-REG
CADB-HE	-D	40	RH	PRO-REG
CADB-HE	-D	54	RH	PRO-REG

CADB-HE	-D	40	LV	PRO-REG
CADB-HE	-D	54	LV	PRO-REG
CADB-HE	-D	40	RV	PRO-REG
CADB-HE	-D	54	RV	PRO-REG

With hot water coil

CADB-HE	-DC	04	LH	PRO-REG
CADB-HE	-DC	08	LH	PRO-REG
CADB-HE	-DC	16	LH	PRO-REG
CADB-HE	-DC	21	LH	PRO-REG
CADB-HE	-DC	40	LH	PRO-REG
CADB-HE	-DC	54	LH	PRO-REG

CADB-HE	-DC	04	RH	PRO-REG
CADB-HE	-DC	08	RH	PRO-REG
CADB-HE	-DC	16	RH	PRO-REG
CADB-HE	-DC	21	RH	PRO-REG
CADB-HE	-DC	40	RH	PRO-REG
CADB-HE	-DC	54	RH	PRO-REG

CADB-HE	-DC	40	LV	PRO-REG
CADB-HE	-DC	54	LV	PRO-REG
CADB-HE	-DC	40	RV	PRO-REG
CADB-HE	-DC	54	RV	PRO-REG

With electric heater battery

CADB-HE	-DI	04	LH	PRO-REG
CADB-HE	-DI	08	LH	PRO-REG
CADB-HE	-DI	16	LH	PRO-REG
CADT-HE	-DI	21	LH	PRO-REG
CADT-HE	-DI	40	LH	PRO-REG
CADT-HE	-DI	54	LH	PRO-REG

CADB-HE	-DI	04	RH	PRO-REG
CADB-HE	-DI	08	RH	PRO-REG
CADB-HE	-DI	16	RH	PRO-REG
CADT-HE	-DI	21	RH	PRO-REG
CADT-HE	-DI	40	RH	PRO-REG
CADT-HE	-DI	54	RH	PRO-REG

CADT-HE	-DI	40	LV	PRO-REG
CADT-HE	-DI	54	LV	PRO-REG
CADT-HE	-DI	40	RV	PRO-REG
CADT-HE	-DI	54	RV	PRO-REG

PLUG & PLAY CONTROL PRO-REG FUNCTIONS

MAIN ELEMENTS
Control panel includes:
General switch
Electric box including control and wiring components, with access from side panel.
FUNCTIONS
Airflow adjustments
Manual airflow adjustment, adjustable at any point of the fan curve.
Automatic airflow adjustment, according to time band (internal Timer)
Automatic airflow adjustment in VAV mode, according to external signal 0-10V (CO_2 accessory)
Automatic speed adjustment of the fans in Constant Arflow mode (Increase of fan speed on the basis of pollution of filters)
Automatic speed adjustment of the fans in Constant Pressure mode (Increase of fan speed when pressure in the duct system decreases)
BOOST function (Forced speed preset via external power free contact)
ON/OFF function (Remote ON/OFF via external power free contact)
Temperature regulation
Temperature probes integrated within the unit (supply, extract, inlet and outlet)
Anti-frost probe water coil (DC-Versions)
Thermal power regulation of hot water coil Modulating 3 points control of water valve (accessory)
Regulation of water coil thermal power. 0-10V control of the water valve (accessory).
Regulation of electric heater battery thermal power in DI versions. Proportional control via SSR.
Bypass adjustments
Manual actuation of bypass
Automatic actuation of bypass function free-cooling/ free-heating
Nocturnal free-cooling mode (Cooling of the building at night)
SECURITY FUNCTIONS
Control of polluted filters via pressure switches (included)
Alarm display in remote control
Detailed information of alarms
Failure in temperature probes
Failure in fan via pressure switches (included)
Fire alarm indication, via activation by external contact coming from fire switchboard.
Anti-frost protection of heat exchanger via bypass activation.
COMMUNICATION
Remote wiring control
ON/OFF remote digital input via external power free contact.
Alarm digital output via power free contact.
Modbus RTU (RS-485)
Bacnet TCP/IP

SCHEMATIC DIAGRAM

CADB-HE-D PRO-REG
Versions without post-heating

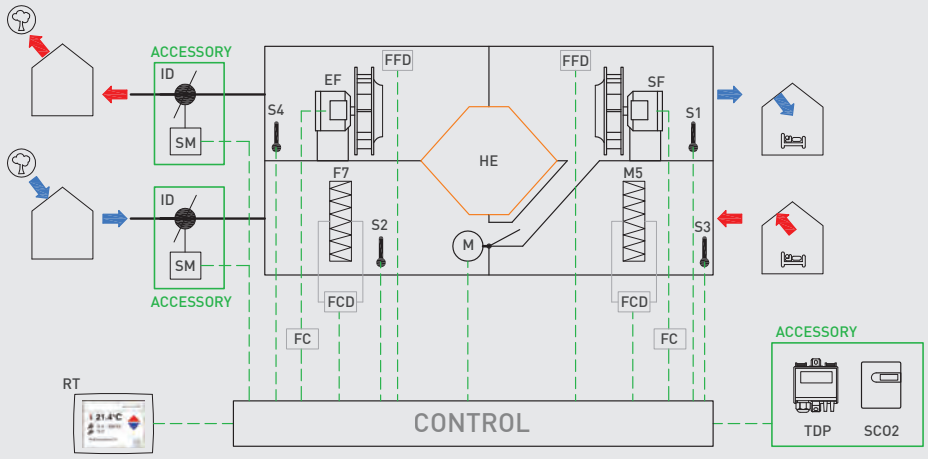

SF	Supply fan
EF	Extract fan
S1	Supply temperature probe
S2	Extract temperature probe
S3	Inlet temperature probe
S4	Outlet temperature probe
FCD	Polluted filters detector (pressure switch)
FFD	Failure motor detector (pressure switch)
HE	High-efficiency heat exchanger
RT	Remote control panel
F7	Supply filter
M5	Extract filter
M	Bypass actuator
FC	Frequency inverter (models 40 and 54)
SCO_2	CO_2 sensor (accessory)
TDP	Pressure sensor TDP-S (accessory)
ID	Isolation damper (accessory)
SM	Actuator damper (accessory)

CADB/T-HE-DI PRO-REG
Versions with electric heater battery

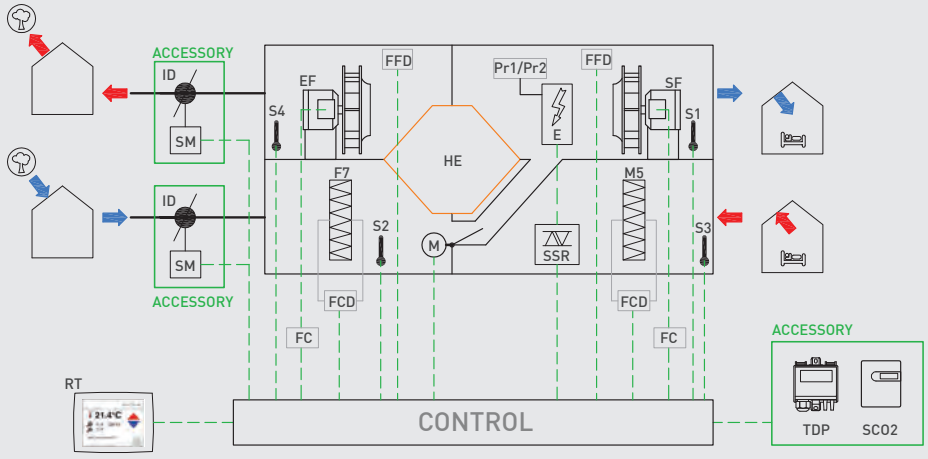

SF	Supply fan
EF	Extract fan
S1	Supply temperature probe
S2	Extract temperature probe
S3	Inlet temperature probe
S4	Outlet temperature probe
FCD	Polluted filters detector (pressure switch)
FFD	Failure motor detector (pressure switch)
HE	High-efficiency heat exchanger
RT	Remote control panel
F7	Supply filter
M5	Extract filter
M	Bypass actuator
Pr1/Pr2	Security protectors (Manual/Auto)
SSR	Electric heater battery proportional regulator
FC	Frequency inverter (models 40 and 54)
SCO_2	CO_2 sensor (accessory)
TDP	Pressure sensor TDP-S (accessory)
ID	Isolation damper (accessory)
SM	Actuator damper (accessory)

CADB-HE-DC PRO-REG
Versions with hot water coil

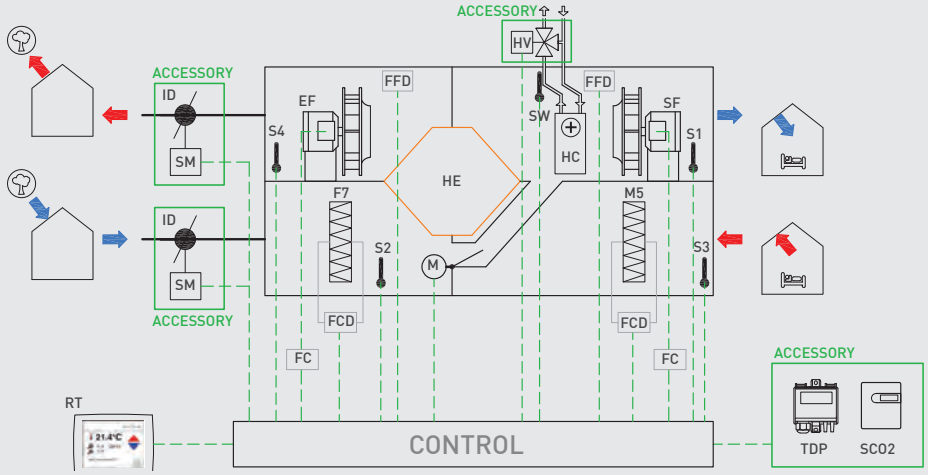

SF	Supply fan
EF	Extract fan
S1	Supply temperature probe
S2	Extract temperature probe
S3	Inlet temperature probe
S4	Outlet temperature probe
SW	Water temperature probe
FCD	Polluted filters detector (pressure switch)
FFD	Failure motor detector (pressure switch)
HE	High-efficiency heat exchanger
RT	Remote control panel
F7	Supply filter
M5	Extract filter
M	Bypass actuator
HC	Hot water coil
FC	Frequency inverter (models 40 and 54)
HV	Water valve (accessory)
SCO_2	CO2 sensor (accessory)
TDP	Pressure sensor TDP-S (accessory)
ID	Isolation damper (accessory)
SM	Actuator damper (accessory)

TECHNICAL CHARACTERISTICS

Models without heater-D

	Complete unit						Fan		Weight (kg)
	Air connections diameter (mm)	Nominal airflow (m^3/h)	Efficiency* (%)	Electrical supply	Max. abs. power (kW)	Maximum current (A)	Speed (rpm)	Maximum current (A)	
CADB-HE D 04 PRO-REG	200	400	87	1/230V, 50Hz	0,196	1,24	3500	0,62	145
CADB-HE D 08 PRO-REG	250	800	86,4	1/230V, 50Hz	0,395	2,2	2650	1,1	180
CADB-HE D 16 PRO-REG	315	1600	85,5	1/230V, 50Hz	0,942	3,2	2845	1,6	231
CADB-HE D 21 PRO-REG	400	2100	86,7	1/230V, 50Hz	0,88	3,8	1580	1,9	328
CADB-HE D 40 PRO-REG	450	4000	86,8	1/230V, 50Hz	2,48	7,1	2435	3,5	588
CADB-HE D 54 PRO-REG	500	5400	87,1	1/230V, 50Hz	3,34	9,5	1945	4,8	718

* Humid efficiency referring to nominal airflow, outdoor conditions (-5ºC / 80% RH) and indoor (20ºC / 50% RH)

Models with built-in electric heater battery- DI

	Complete unit						Fan		Electric heater battery		Weight (kg)
	Air connections diameter (mm)	Nominal airflow (m^3/h)	Efficiency* (%)	Electrical supply	Max. abs. power (kW)	Maximum current (A)	Speed (rpm)	Maximum current (A)	Speed (rpm)	Maximum current (A)	
CADB-HE DI 04 PRO-REG	200	400	87	1/230V, 50Hz	1,2	5,7	3500	0,62	1	4,5	146
CADB-HE DI 08 PRO-REG	250	800	86,4	1/230V, 50Hz	2,4	11,3	2650	1,1	2	9,1	183
CADB-HE DI 16 PRO-REG	315	1600	85,5	1/230V, 50Hz	4,4	19,1	2845	1,6	3,5	15,9	235
CADT-HE DI 21 PRO-REG	400	2100	86,7	3+N/400V, 50Hz	6,9	12,9	1580	1,9	6	9,1	333
CADT-HE DI 40 PRO-REG	450	4000	86,8	3+N/400V, 50Hz	11,5	20,8	2435	3,5	9	13,7	597
CADT-HE DI 54 PRO-REG	500	5400	87,1	3+N/400V, 50Hz	15,3	27,7	1945	4,8	12	18,2	730

* Humid efficiency referring to nominal airflow, outdoor conditions (-5ºC / 80% RH) and indoor (20ºC / 50% RH)

Models with built in hot water coil

	Complete unit						Fan		Hot water coil		Weight (kg)
	Air connections diameter (mm)	Nominal airflow (m^3/h)	Efficiency* (%)	Electrical supply	Max. abs. power (kW)	Maximum current (A)	Speed (rpm)	Maximum current (A)	Heat power T.water 80/60ºC (kW)	Heat power T.water 50/45ºC (kW)	
CADB-HE DC 04 PRO-REG	200	400	87	1/230V, 50Hz	0,196	1,24	3500	0,62	2,7	1,6	147
CADB-HE DC 08 PRO-REG	250	800	86,4	1/230V, 50Hz	0,395	2,2	2650	1,1	5,1	3,1	183
CADB-HE DC 16 PRO-REG	315	1600	85,5	1/230V, 50Hz	0,942	3,2	2845	1,6	8,6	5,3	235
CADB-HE DC 21 PRO-REG	400	2100	86,7	1/230V, 50Hz	0,88	3,8	1580	1,9	12,6	7,8	333
CADB-HE DC 40 PRO-REG	450	4000	86,8	1/230V, 50Hz	2,48	5,0	2435	3,5	23,9	14,4	597
CADB-HE DC 54 PRO-REG	500	5400	87,1	1/230V, 50Hz	3,34	6,7	1945	4,8	32,1	19,5	730

* Humid efficiency referring to nominal airflow, outdoor conditions (-5ºC / 80% RH) and indoor (20ºC / 50% RH)

ACOUSTIC CHARACTERISTICS

Model	Inlet	Outlet	Radiated
CADB-HE 04 PRO-REG	47	56	39
CADB-HE 08 PRO-REG	43	52	35
CADB-HE 16 PRO-REG	44	53	36
CADB/T-HE 21 PRO-REG	48	59	42
CADB/T-HE 40 PRO-REG	51	63	46
CADB/T-HE 54 PRO-REG	53	64	47

Average sound pressure level in free field conditions at 3m distance.

RECOVERY EFFICIENCY ACCORDING TO THE AIRFLOW

Values referring to the following conditions:
Outdoor temperature: -5ºC, RH=80%
Indoor temperature: 20ºC, RH-=50%.

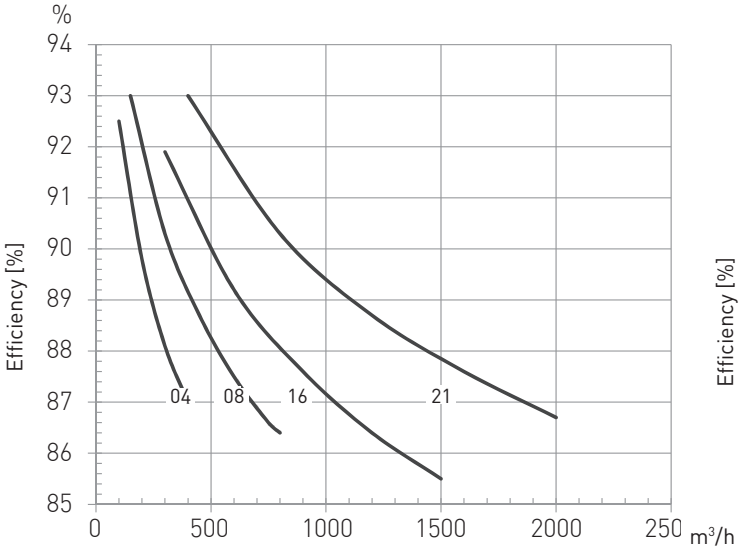

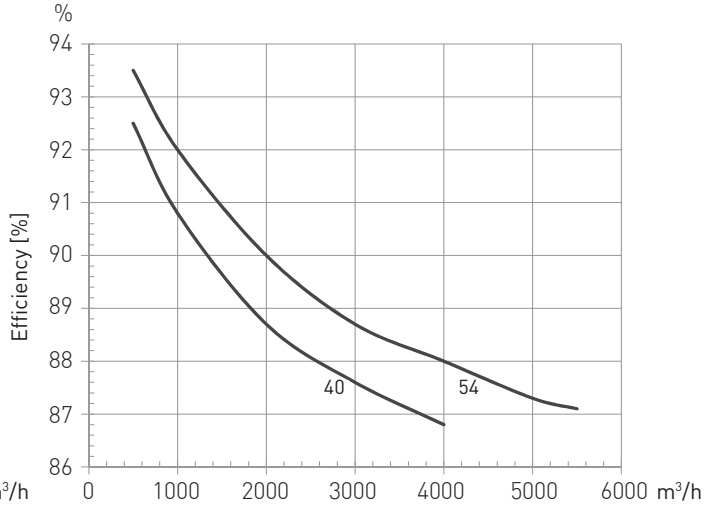

RECOVERY EFFICIENCY RELATIVE TO OUTDOOR TEMPERATURE

		OUTDOOR TEMPERATURE		INDOOR TEMPERATURE		PERFORMANCE	
Model	**Airflow (m³/h)**	**ºC**	**R.H. (%)**	**ºC**	**R.H. (%)**	**Efficiency (%)**	**Recovered power (kW)**
CADB-HE 04	400	-10	80	17,2	10,6	90,7	3,65
		-5	80	16,7	16,9	87	2,92
		0	70	16,6	22,7	82,8	2,23
		5	70	17,1	31,3	80,9	1,63
CADB-HE 08	800	-10	80	17	10,7	90,1	7,3
		-5	80	16,6	17	86,4	5,8
		0	70	16,6	22,9	82,2	4,4
		5	70	17	31,5	80,2	3,2
CADB-HE 16	1600	-10	80	16,7	10,9	89,1	14,4
		-5	80	16,3	17,3	85,3	11,5
		0	70	16,2	23,3	80,9	8,7
		5	70	16,8	31,9	78,8	6,4
CADB/T-HE 21	2100	-10	80	17,1	10,7	90,2	19,1
		-5	80	16,6	17	86,5	15,2
		0	70	16,5	22,9	82,3	11,6
		5	70	17	31,4	80,3	8,5
CADB/T-HE 40	4000	-10	80	16,5	12,2	88,2	38,1
		-5	80	16,7	17,7	86,8	30,9
		0	70	17	22	85,1	24
		5	70	17,4	30,7	82,9	17,3
CADB/T-HE 54	5400	-10	80	16,6	12,1	88,5	51,5
		-5	80	16,8	17,6	87,1	41,8
		0	70	17,1	21,9	85,7	32,5
		5	70	17,5	30,5	83,3	23,5

*For indoor temperature 20ºC 50%

RECOVERY EFFICIENCY OF WATER COILS RELATIVE TO OUTDOOR TEMPERATURE AND AIRFLOW

			AIR			WATER	
Model	**Water T. In/Out (ºC)**	**Airflow (m³/h)**	**Power (kW)**	**Out. T (ºC)**	**Out. R.H. (%)**	**Water flow (l/h)**	**Press. Drop (kPa)**
CADB-HE 04	80/60	400	2,7	36,7	8	115	2
		280	2,1	39,4	7	92	2
	70/60	400	2,5	35,6	8	217	6
		280	2,0	38,1	7	172	4
	50/45	400	1,6	28,8	12	277	10
		280	1,3	30,4	11	220	7
CADB-HE 08	80/60	800	5,1	35,7	8	218	5
		560	4,1	38,6	7	175	3
	70/60	800	4,8	34,7	9	415	14
		560	3,8	37,2	8	330	9
	50/45	800	3,1	28,3	13	530	22
		560	2,4	29,8	12	422	15
CADB-HE 16	80/60	1600	8,6	32,8	10	370	6
		1120	6,9	35,2	9	298	3
	70/60	1600	8,3	32,2	10	370	15
		1120	6,6	34,5	9	298	10
	50/45	1600	5,3	26,7	14	370	25
		1120	4,2	28,2	13	298	17
CADB/T-HE 21	80/60	2100	12,6	34,6	9	542	3
		1470	10,1	37,1	8	433	2
	70/60	2100	12,2	34,0	9	1050	11
		1470	9,7	36,4	8	837	8
	50/45	2100	7,8	27,9	13	1342	18
		1470	6,2	29,4	12	1070	12
CADB/T-HE 40	80/60	4000	23,9	34,5	9	1025	9
		2800	19,1	37,1	8	824	6
	70/60	4000	22,5	33,5	9	1940	27
		2800	18,0	35,9	8	1552	18
	50/45	4000	14,4	27,5	13	2476	44
		2800	11,5	29,1	12	1980	29
CADB/T-HE 54	80/60	5400	32,1	34,4	9	1380	6
		3780	25,8	37	8	1106	4
	70/60	5400	30,6	33,6	9	2634	19
		3780	24,5	36,0	8	2107	13
	50/45	5400	19,5	27,6	13	3366	31
		3780	15,6	29,1	12	2691	21

STANDARD CONFIGURATIONS CADB/T-HE D/DI/DC PRO-REG

Based on these standard configurations other configurations can be quickly adapted by the installer.

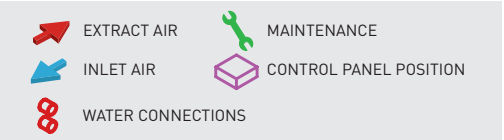

CADB/T-HE 04 A 21
Horizontal versions (false-ceiling)

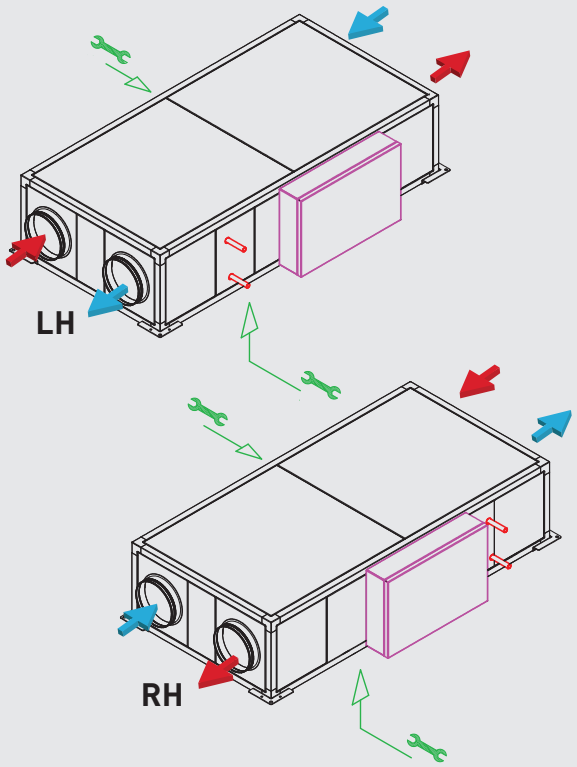

CADB/T-HE 40 Y 54
Horizontal versions (Outdoor installation)

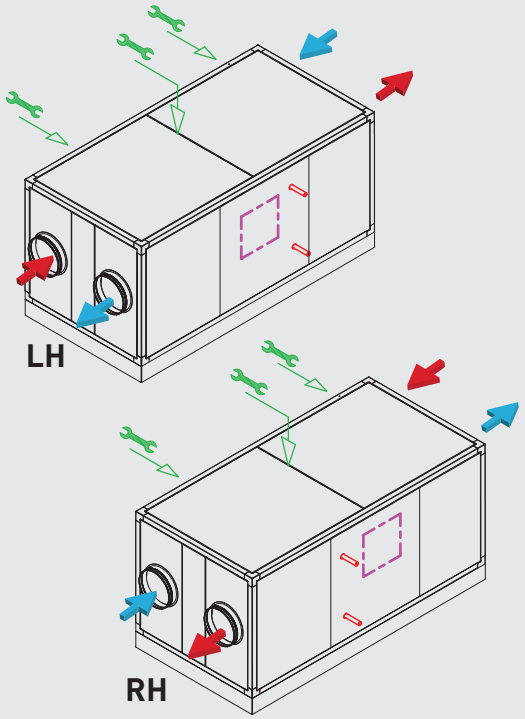

CADB/T-HE 40 Y 54
Vertical versions

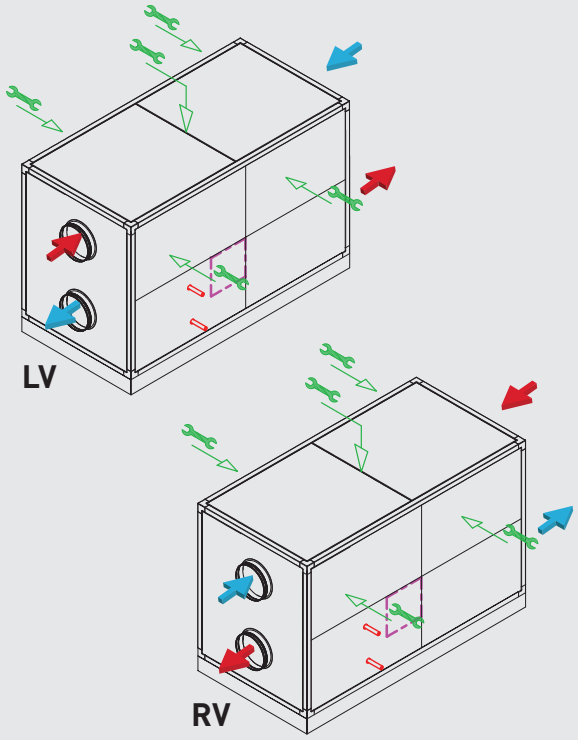

DIMENSIONS (mm)

CADB/T-HE 04 to 21 LH

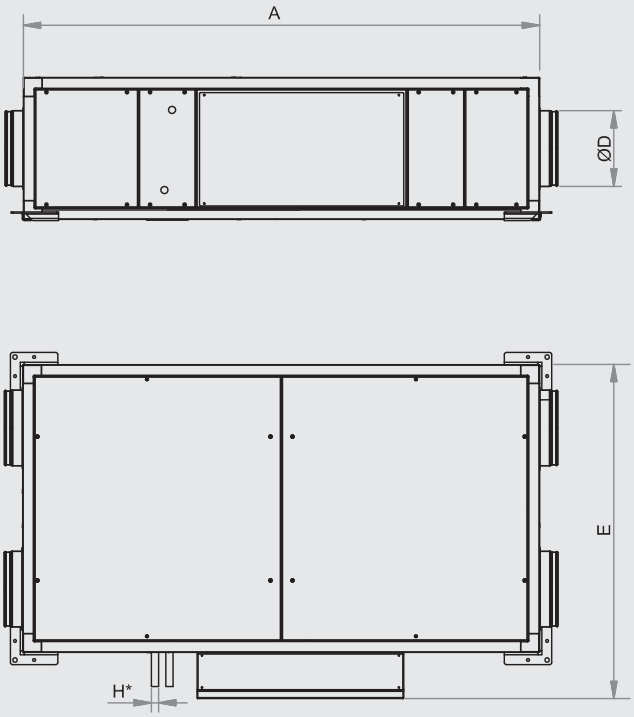

Model	A	B	C	D	E	F	G	H
04	1520	760	375	200	885	187	167	1/2" GM
08	1750	910	425	250	1035	212	198	1/2" GM
16	1950	1240	450	315	1365	225	245	1/2" GM
21	2300	1640	550	400	1765	275	300	1/2" GM

CADB/T-HE 04 to 21 RH

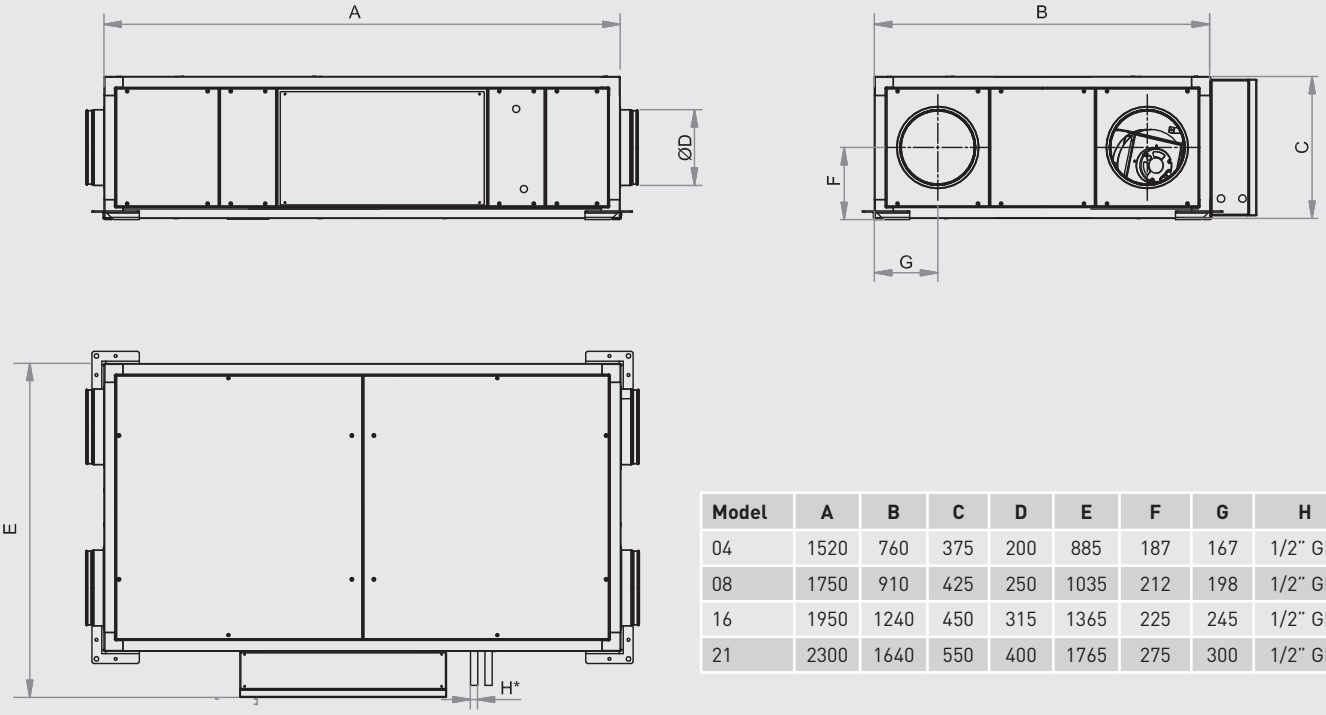

Model	A	B	C	D	E	F	G	H
04	1520	760	375	200	885	187	167	1/2" GM
08	1750	910	425	250	1035	212	198	1/2" GM
16	1950	1240	450	315	1365	225	245	1/2" GM
21	2300	1640	550	400	1765	275	300	1/2" GM

DIMENSIONS (mm)

CADB/T-HE 40 and 54 LH

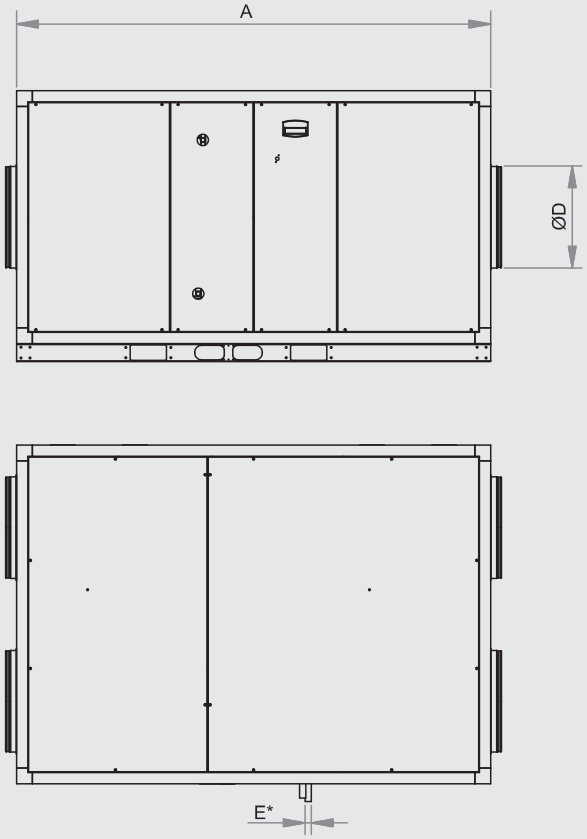

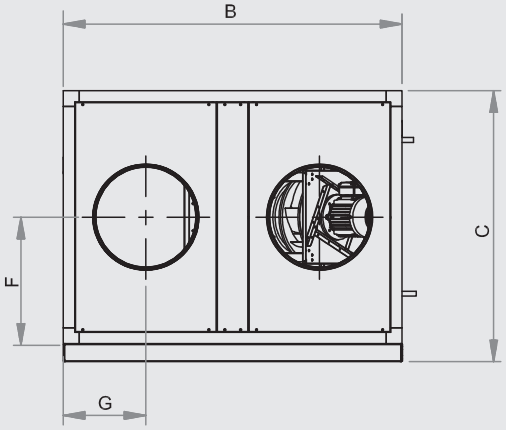

Model	A	B	C	D	E	F	G
40	2100	1500	1200	450	3/4"GM	640	364
54	2250	1550	1580	500	3/4"GM	830	324

CADB/T-HE 40 and 54 RH

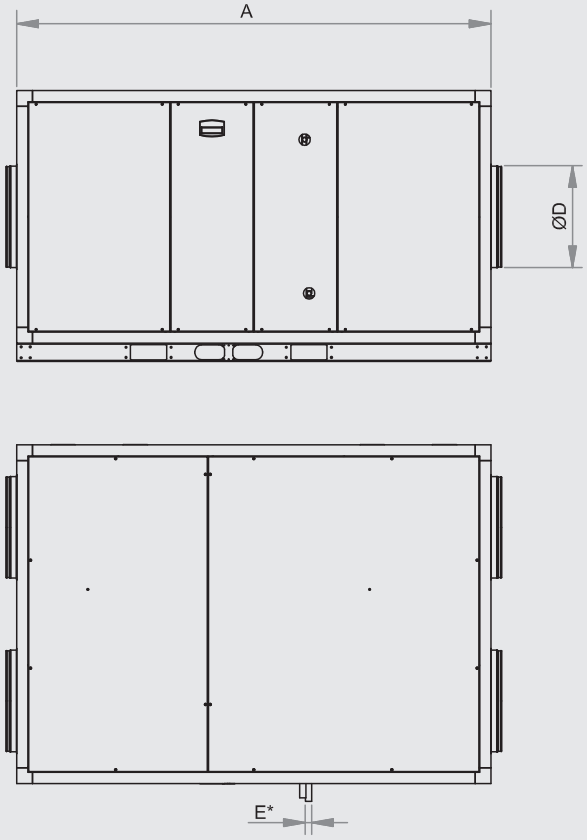

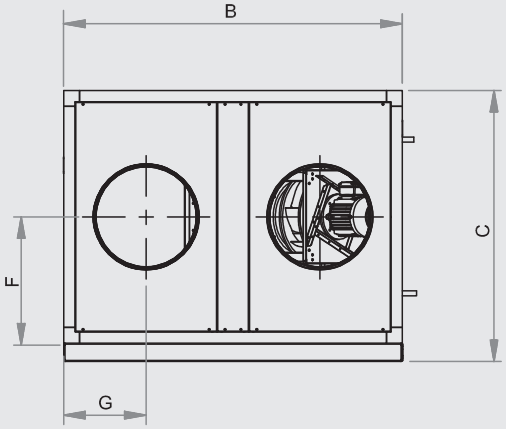

Model	A	B	C	D	E	F	G
40	2100	1500	1200	450	3/4"GM	640	364
54	2250	1550	1580	500	3/4"GM	830	324

DIMENSIONS (mm)

CADB/T-HE 40 and 54 LV

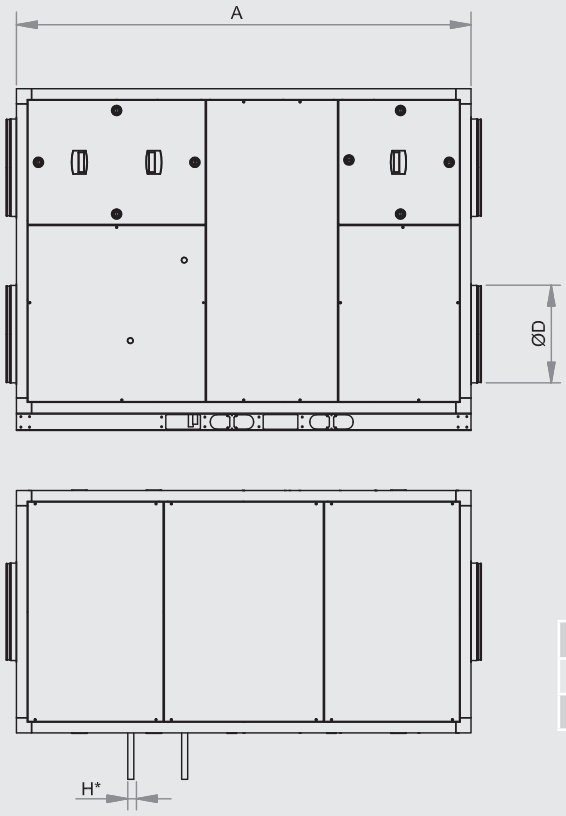

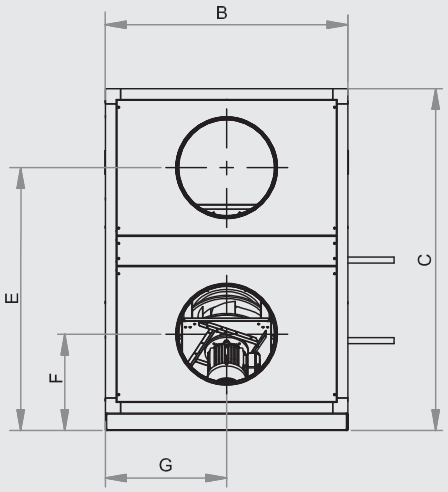

Model	A	B	C	D	E	F	G	H
40	2100	1120	1580	450	1215	445	560	1"GM
54	2250	1500	1630	500	1305	404	750	1"GM

CADB/T-HE 40 and 54 RV

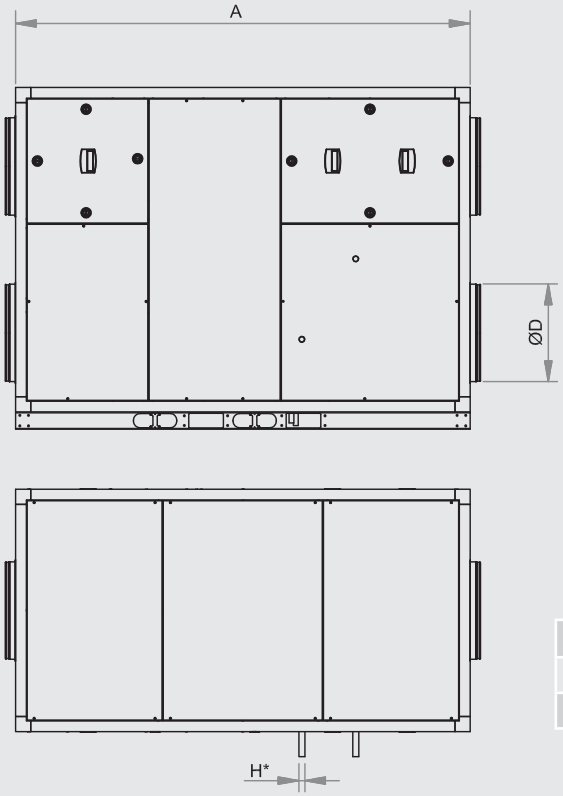

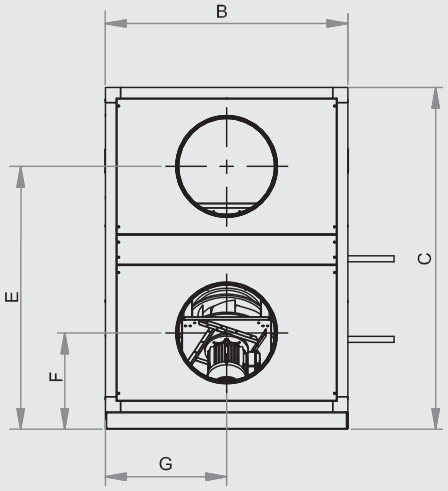

Model	A	B	C	D	E	F	G	H
40	2100	1120	1580	450	1215	445	560	1"GM
54	2250	1500	1630	500	1305	404	750	1"GM

PERFORMANCE CURVES

- q_v: Airflow in m³/h.
- p_{sf}: Static pressure in Pa.
- Pabs: Absorbed power at maximum speed (W).
- Dry air at 20ºC and 760 mmHg.
- Performance data in accordance with ISO 5801 and AMCA 210-99 Standards.

CADB-HE-D 04

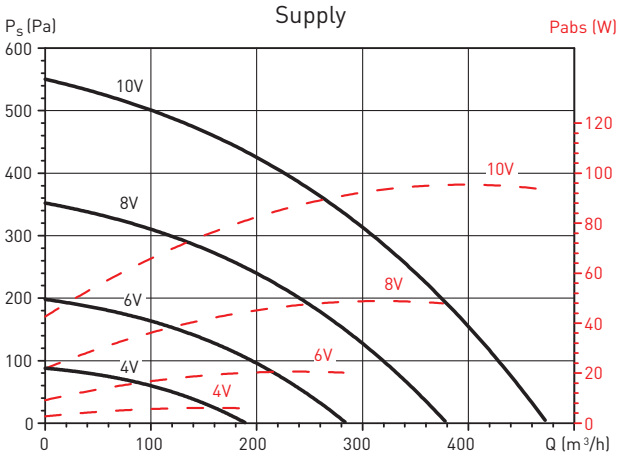

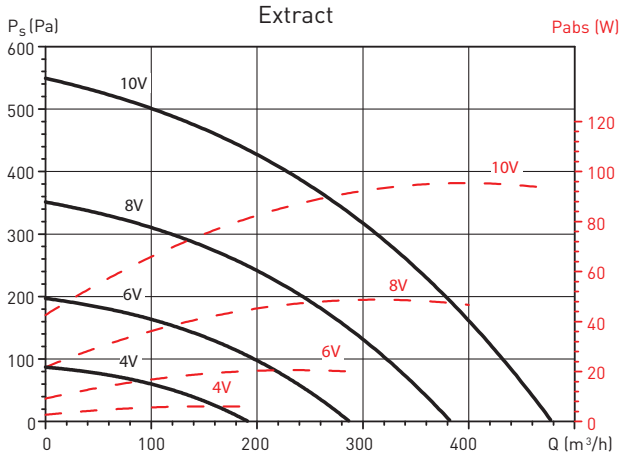

CADB-HE-DC 04

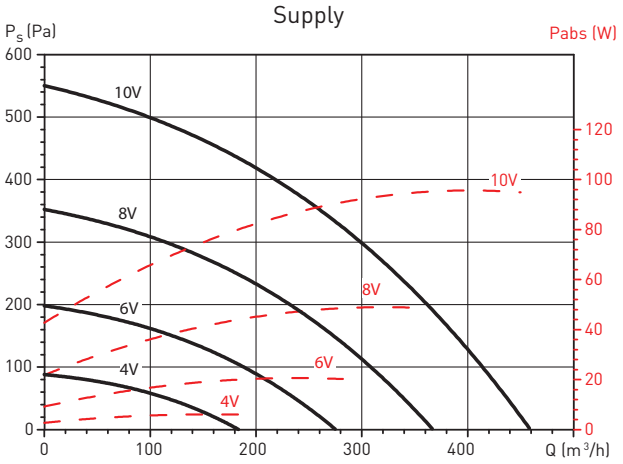

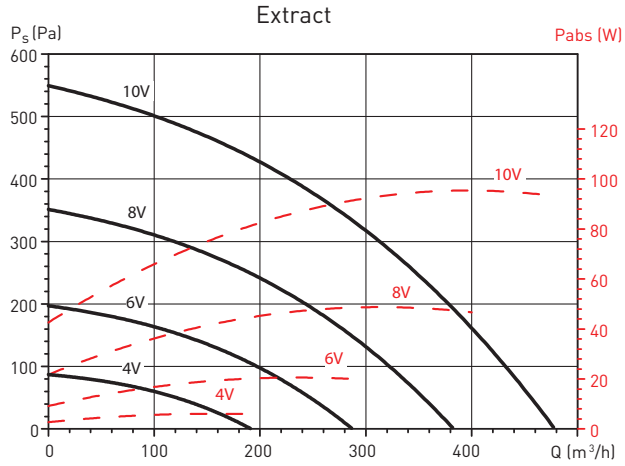

CADB-HE-DI 04

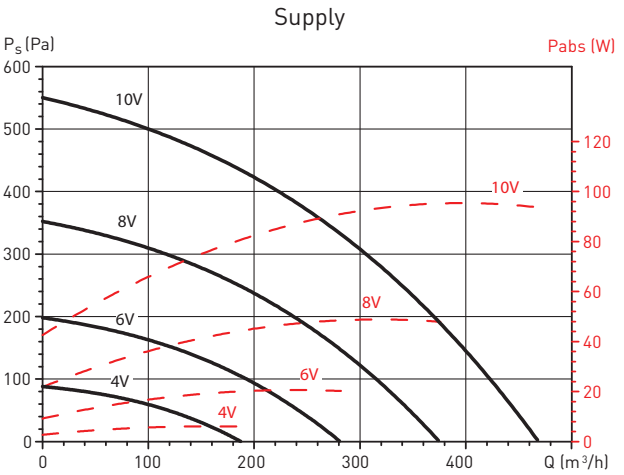

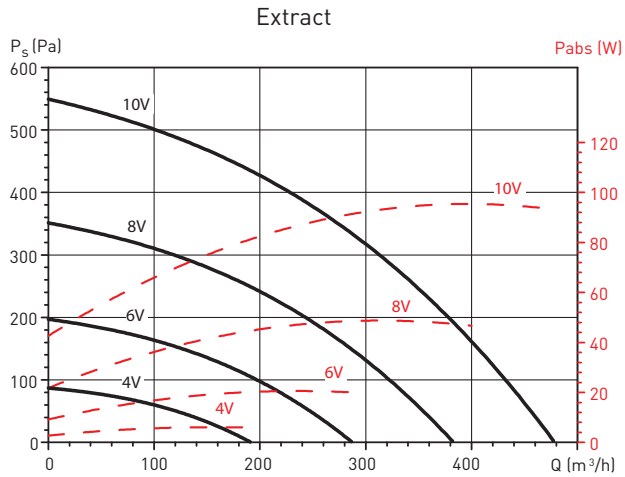

PERFORMANCE CURVES

- q_v: Airflow in m³/h.
- p_{sf}: Static pressure in Pa.
- Pabs: Absorbed power at maximum speed (W).
- Dry air at 20ºC and 760 mmHg.
- Performance data in accordance with ISO 5801 and AMCA 210-99 Standards.

CADB-HE-D 08

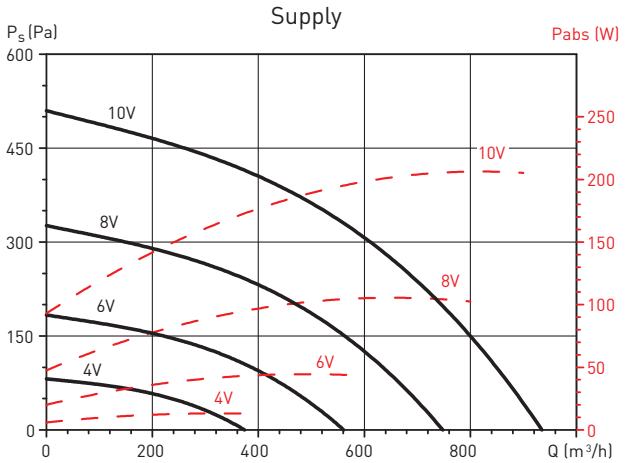

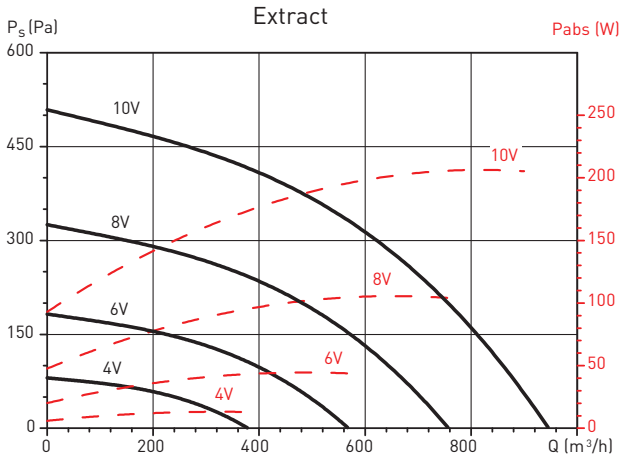

CADB-HE-DC 08

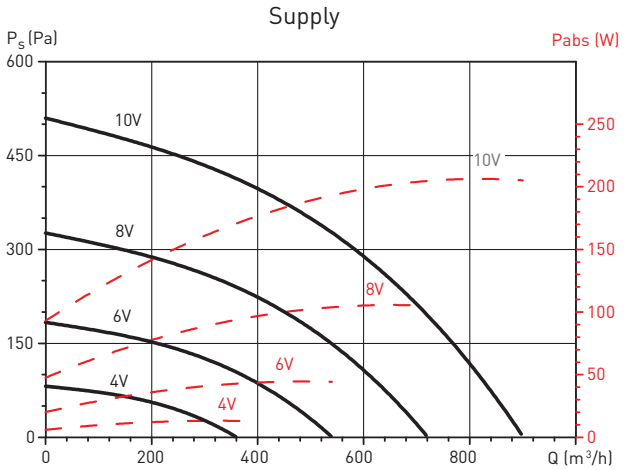

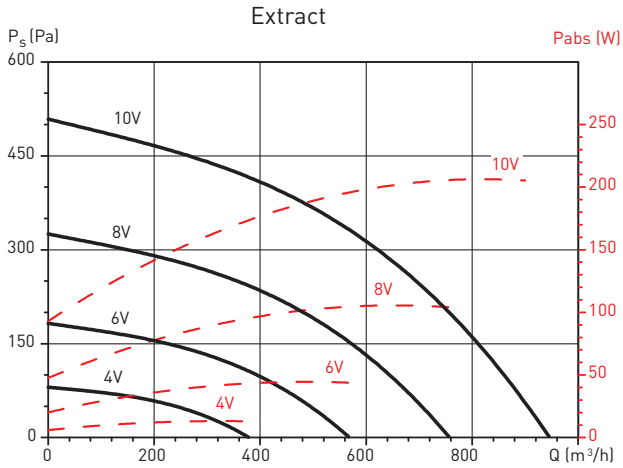

CADB-HE-DI 08

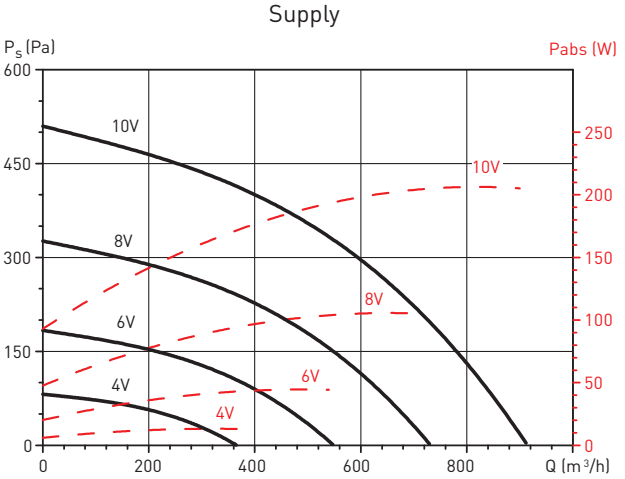

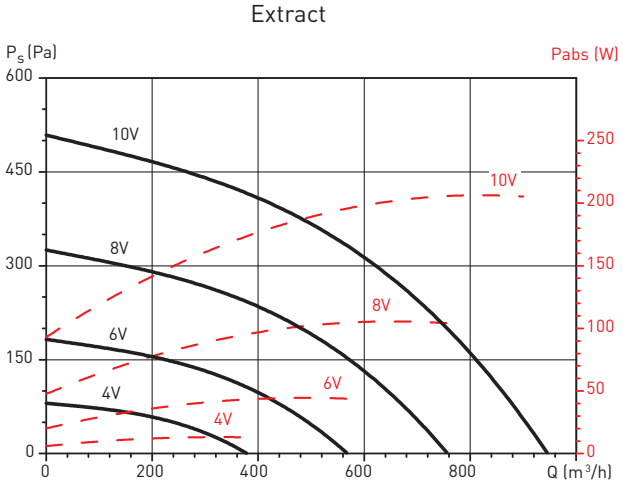

PERFORMANCE CURVES

- q_v: Airflow in m^3/h.
- p_{sf}: Static pressure in Pa.
- Pabs: Absorbed power at maximum speed (W).
- Dry air at 20ºC and 760 mmHg.
- Performance data in accordance with ISO 5801 and AMCA 210-99 Standards.

CADB-HE-D 16

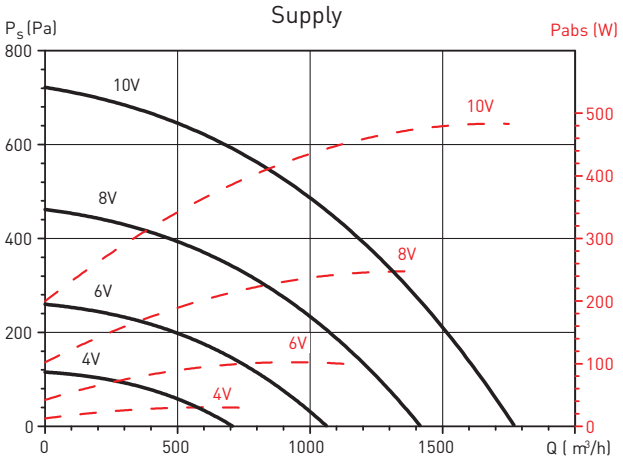

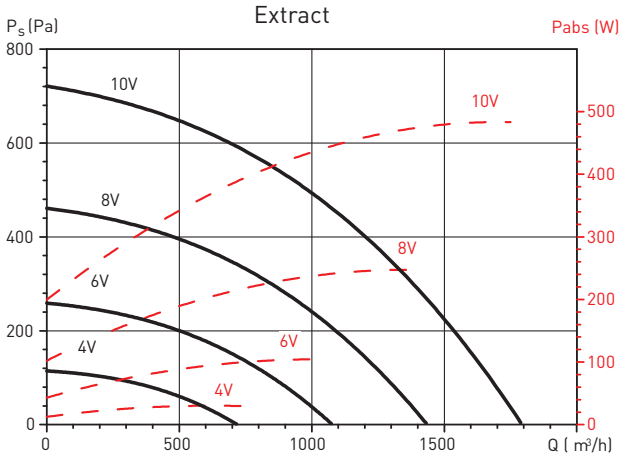

CADB-HE-DC 16

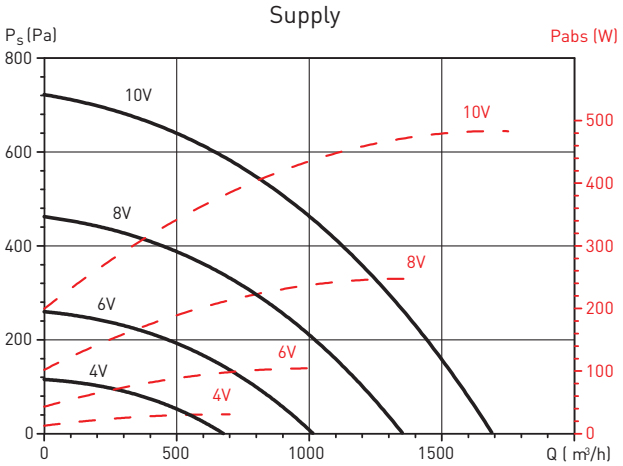

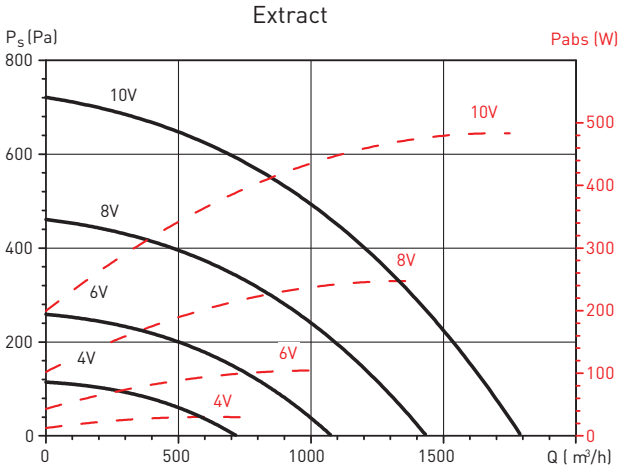

CADB-HE-DI 16

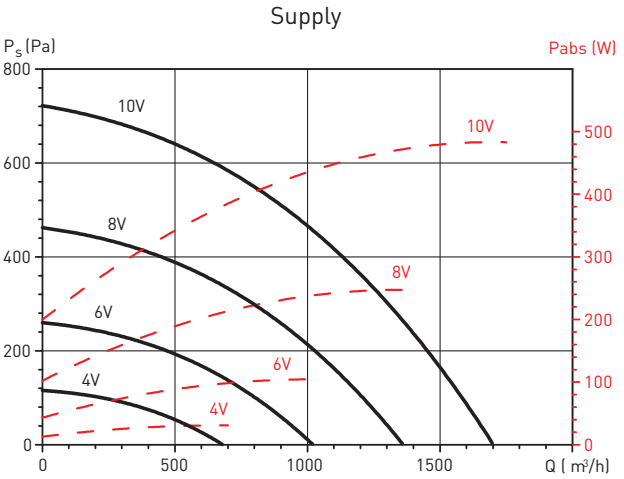

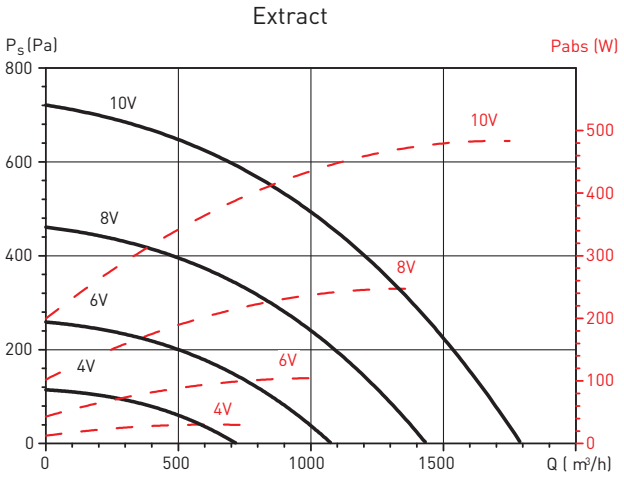

PERFORMANCE CURVES

- q_v: Airflow in m³/h.
- p_{sf}: Static pressure in Pa.
- Pabs: Absorbed power at maximum speed (W).
- Dry air at 20ºC and 760 mmHg.
- Performance data in accordance with ISO 5801 and AMCA 210-99 Standards.

CADB-HE-D 21

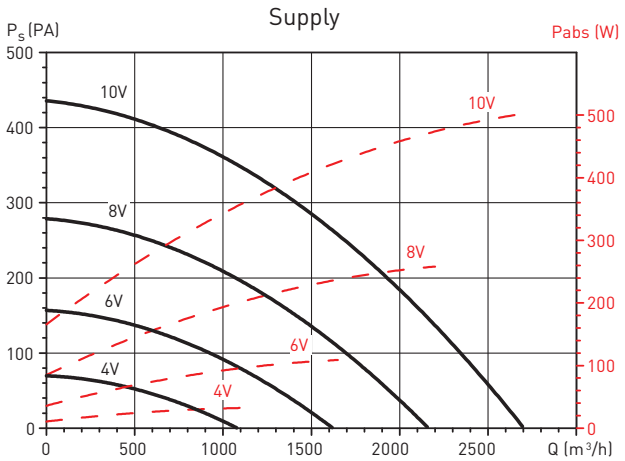

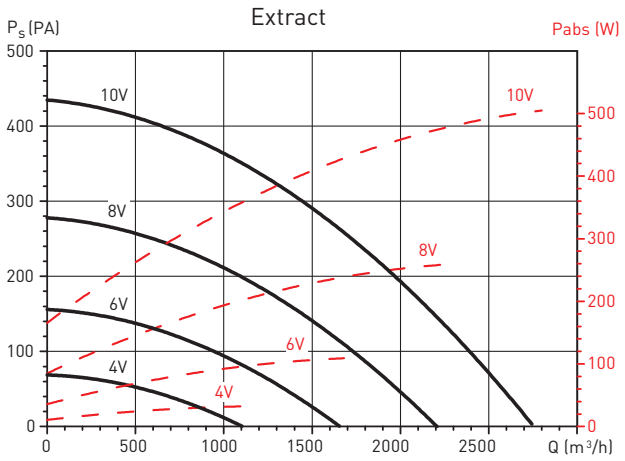

CADB-HE-DC 21

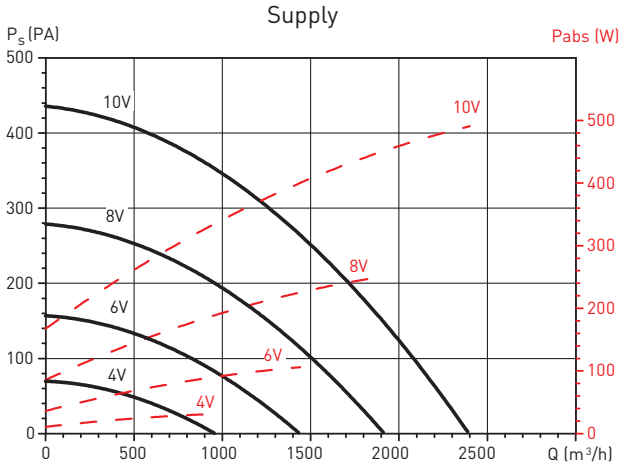

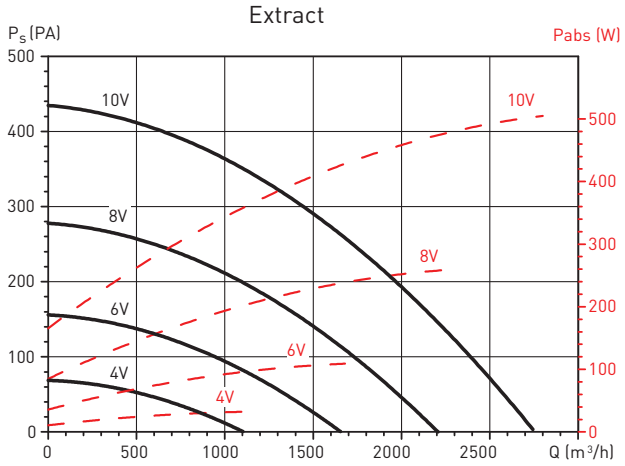

CADT-HE-DI 21

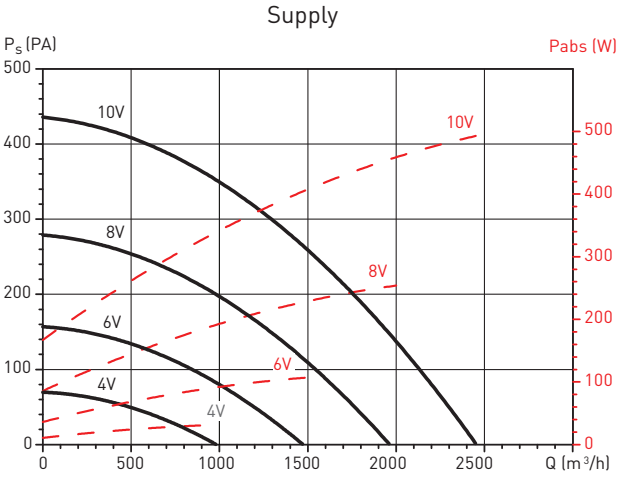

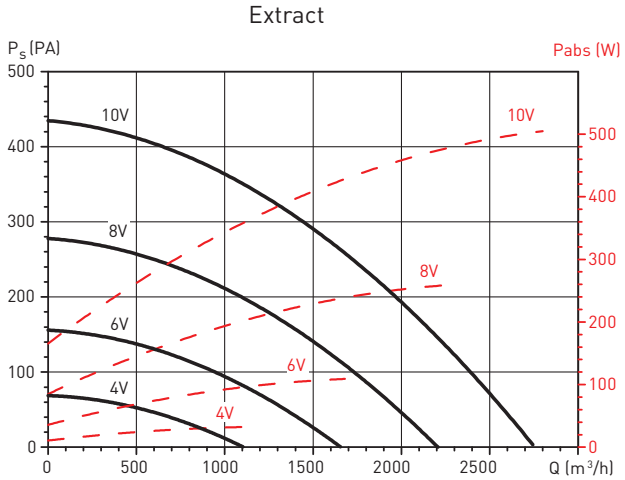

PERFORMANCE CURVES

- q_v: Airflow in m³/h.
- p_{sf}: Static pressure in Pa.
- Pabs: Absorbed power at maximum speed (W).
- Dry air at 20ºC and 760 mmHg.
- Performance data in accordance with ISO 5801 and AMCA 210-99 Standards.

CADB-HE-D 40

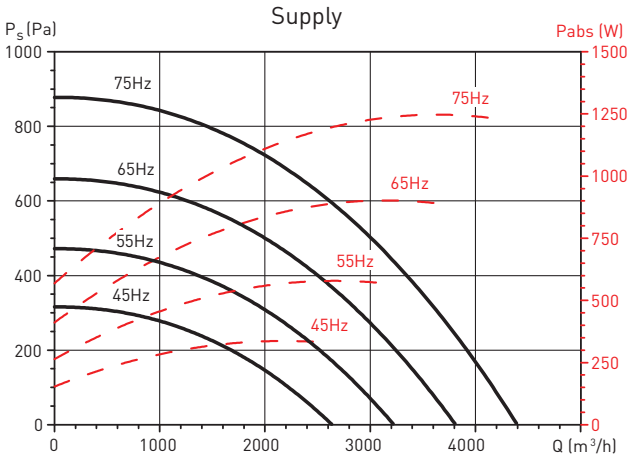

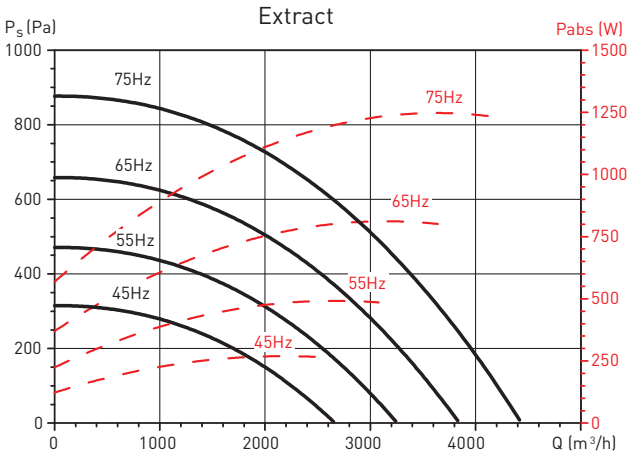

CADB-HE-DC 40

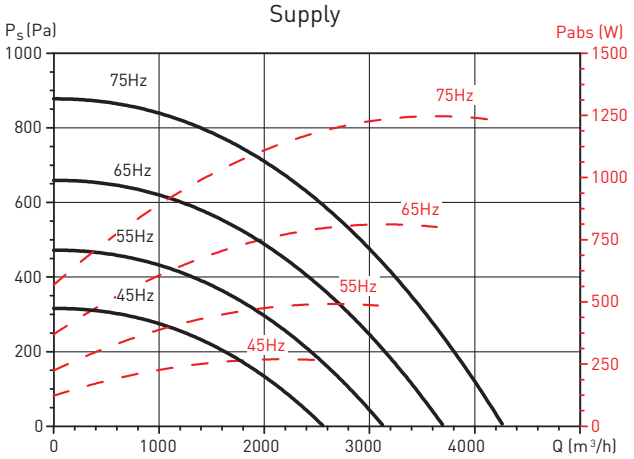

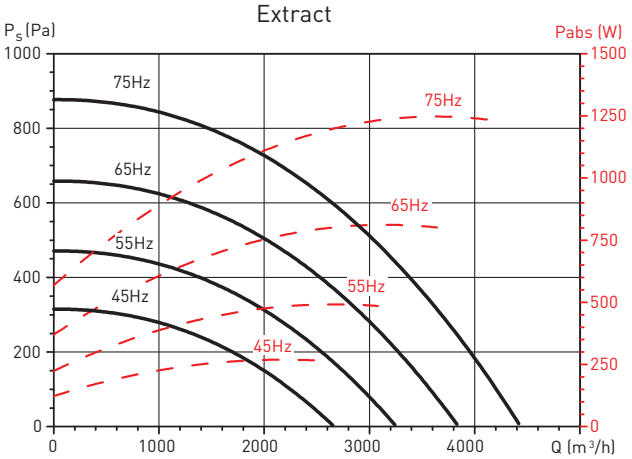

CADT-HE-DI 40

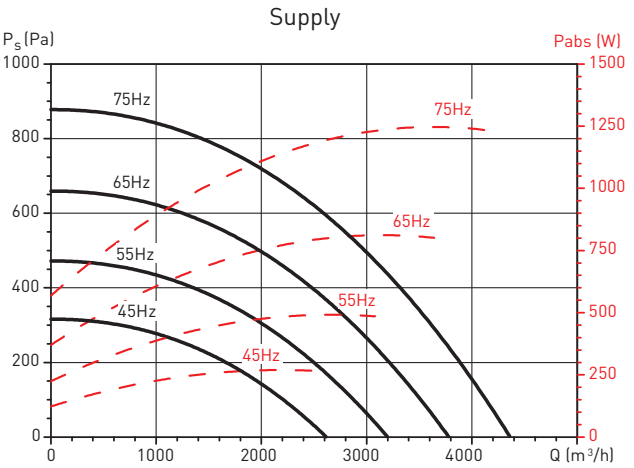

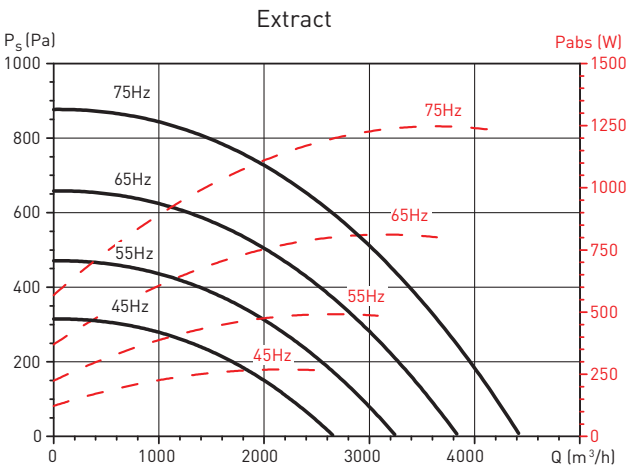

PERFORMANCE CURVES

- q_v: Airflow in m³/h.
- p_{sf}: Static pressure in Pa.
- Pabs: Absorbed power at maximum speed (W).
- Dry air at 20ºC and 760 mmHg.
- Performance data in accordance with ISO 5801 and AMCA 210-99 Standards.

CADB-HE-D 54

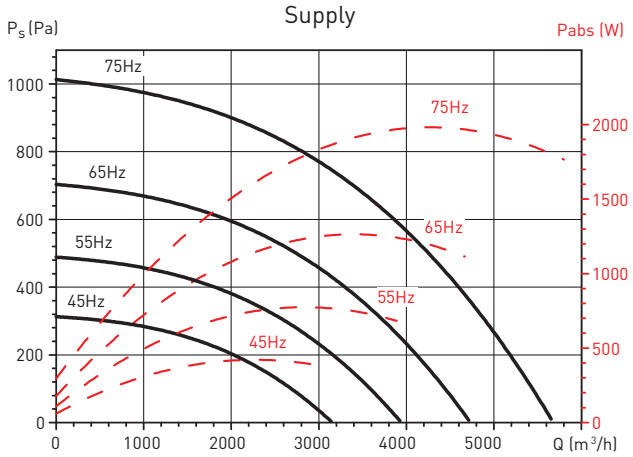

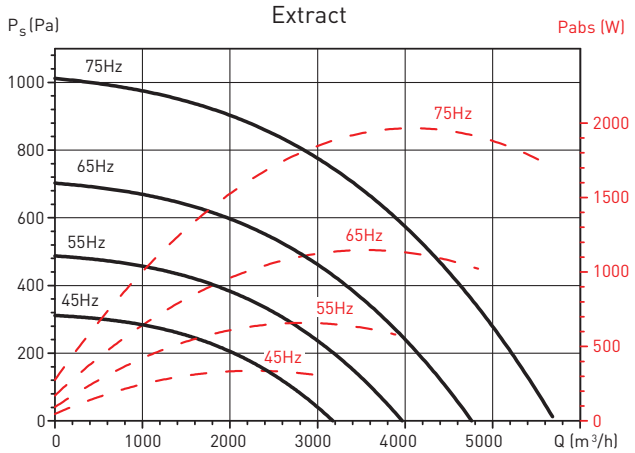

CADB-HE-DC 54

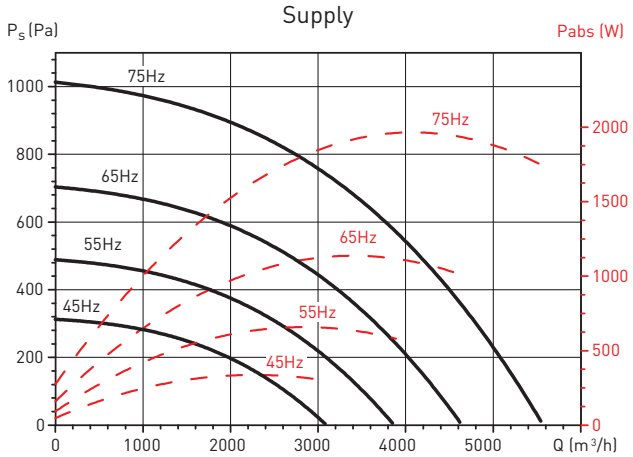

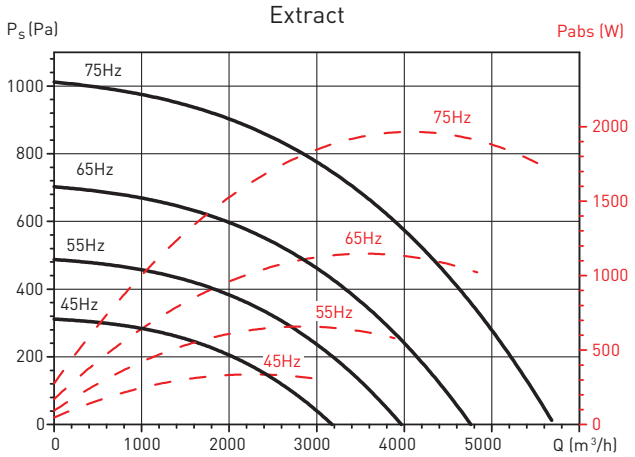

CADT-HE-DI 54

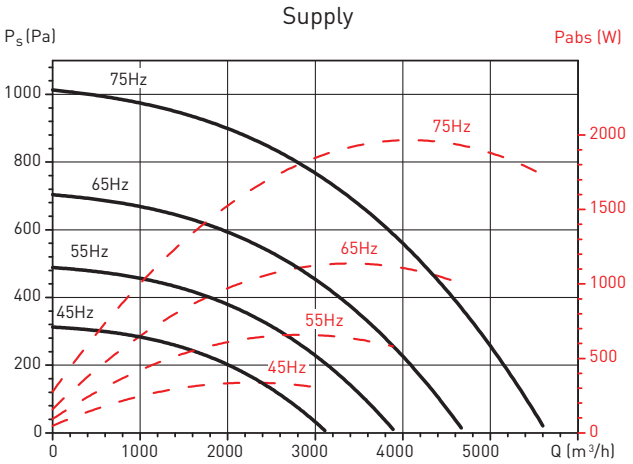

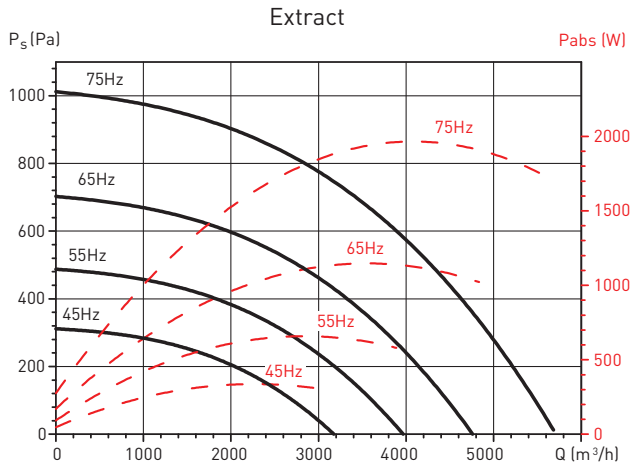

ACCESSORIES

For more information see "Heat recovery accessories" and/or "Mounting accessories".
Mounting accessories supplied in unpainted galvanized sheet.

Model	Ø (mm)	AFR-HE (spare filter for CADB/T-HE)				SIL Circular sound attenuators	APC Inlet/outlet protection guards	Circular flexible connector
		AFR-HE G4	AFR-HE M5	AFR-HE F7	AFR-HE F9			
CADB-HE D/DI/DC 04	200	AFR-HE 200/04 G4	AFR-HE 200/04 M5	AFR-HE 200/04 F7	AFR-HE 200/04 F9	SIL-200	APC-200	ACOPEL F400-200/160N
CADB-HE D/DI/DC 08	250	AFR-HE 250/08 G4	AFR-HE 250/08 M5	AFR-HE 250/08 F7	AFR-HE 250/08 F9	SIL-250	APC-250	ACOPEL F400-250/160N
CADB-HE D/DI/DC 16	315	AFR-HE 315/16 G4	AFR-HE 315/16 M5	AFR-HE 315/16 F7	AFR-HE 315/16 F9	SIL-315	APC-315	ACOPEL F400-315/160N
CADB/T-HE D/DI/DC 21	400	AFR-HE 400/21 G4	AFR-HE 400/21 M5	AFR-HE 400/21 F7	AFR-HE 400/21 F9	SIL-400	APC-400	ACOPEL F400-400/160N
CADB/T-HE D/DI/DC 40	450	AFR-HE 450/40 G4	AFR-HE 450/40 M5	AFR-HE 450/40 F7	AFR-HE 450/40 F9	SIL-450	APC-450	ACOPEL F400-450/160N
CADB/T-HE D/DI/DC 54	500	AFR-HE 500/54 G4	AFR-HE 500/54 M5	AFR-HE 500/54 F7	AFR-HE 500/40 F9	SIL-500	APC-500	ACOPEL F400-500/160N

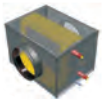

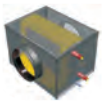

Model	3-Way valve with proportional actuator	Water coils			
	Proportional control	BA-AF (Cold water)	BA-AC-N (Hot water)	BA-AFC (Cold and hot water coil, 4 tubes)	BA-DX (Direct expansion coil)
CADB-HE D/DI/DC 04	3WV DN 15 KVS1 PROP 24V	BA-AF 04 HE R/L	BA-AC 04 HE R/L	BA-AFC 04 HE R/L	BA-DX 04 HE R/L
CADB-HE D/DI/DC 08	3WV DN 15 KVS1,6 PROP 24V	BA-AF 08 HE R/L	BA-AC 08 HE R/L	BA-AFC 08 HE R/L	BA-DX 08 HE R/L
CADB-HE D/DI/DC 16	3WV DN 15 KVS2,5 PROP 24V	BA-AF 16 HE R/L	BA-AC 16 HE R/L	BA-AFC 16 HE R/L	BA-DX 16 HE R/L
CADB/T-HE D/DI/DC 21	3WV DN 20 KVS4 PROP 24V	BA-AF 21 HE R/L	BA-AC 21 HE R/L	BA-AFC 21 HE R/L	BA-DX 21 HE R/L
CADB/T-HE D/DI/DC 40	3WV DN 25 KVS6,3 PROP 24V	BA-AF 40 HE R/L	BA-AC 40 HE R/L	BA-AFC 40 HE R/L	BA-DX 40 HE R/L
CADB/T-HE D/DI/DC 54	3WV DN 25 KVS10 PROP 24V	BA-AF 54 HE R/L	BA-AC 54 HE R/L	BA-AFC 54 HE R/L	BA-DX 54 HE R/L

ACCESSORIES

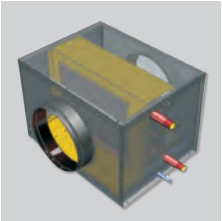

BA-AF HE
External module with reversible cold water coil (2 tubes).

BA-DX HE
Module with direct expansion coil to integrate in (R-410A) networks controlled by external Kits-DX.

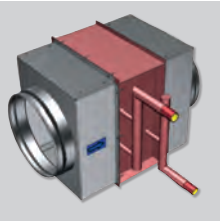

BA-AC HE
External module with reversible hot water coil (2 tubes)

BA-AFC HE
External module with independent coils for hot and cold water (4 tubes).

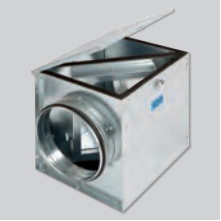

FBL-N
Filtration box, provided without filters, to mount AFR-N filters
(2 as a maximum).
Suitable to mount outdoors.
Manufactured in galvanized steel.
Circular flanges with air tight spigot seals.
Cover easily removable to quickly replace the filter.

Model	Ø (mm)	Accessory and replacement filters for FBL-HE y CADB/T-HE			
		AFR-HE G4	AFR-HE M5	AFR-HE F7	AFR-HE F9
FBL-04 HE	200	AFR-HE 200/04 G4	AFR-HE 200/04 M5	AFR-HE 200/04 F7	AFR-HE 200/04 F9
FBL-08 HE	250	AFR-HE 250/08 G4	AFR-HE 250/08 M5	AFR-HE 250/08 F7	AFR-HE 250/08 F9
FBL-16 HE	315	AFR-HE 315/16 G4	AFR-HE 315/16 M5	AFR-HE 315/16 F7	AFR-HE 315/16 F9
FBL-21 HE	400	AFR-HE 400/21 G4	AFR-HE 400/21 M5	AFR-HE 400/21 F7	AFR-HE 400/21 F9
FBL-40 HE	450	AFR-HE 450/40 G4	AFR-HE 450/40 M5	AFR-HE 450/40 F7	AFR-HE 450/40 F9
FBL-54 HE	500	AFR-HE 500/54 G4	AFR-HE 500/54 M5	AFR-HE 500/54 F7	AFR-HE 500/40 F9

3-WAY VALVES WITH PROPORTIONAL ACTUATOR
Three way motorised control valve.
Pressure 16 bar.
Rp" internal nut.
Nickel-plated forged brass casing.
Stainless steel valve cone.
Stainless steel shaft.
Average temperatures -10..+120.
5Nm mounted rotary actuator.
AC/DC 24V, proportional.
90 s/90° valve response time.
DC 2....10V working range.
IP 54, automatic or manual activation.

TPP-N

Rain protection cowl
Rain protection cowls are supplied with a finish of galvanized sheet without painting.

Heat recovery unit model	Rain protection cowl model	
	Horizontal (LH / RH)	Vertical (LV / RV)
CADB-HE D/DI/DC 04	TPP-HE-H 04	-
CADB-HE D/DI/DC 08	TPP-HE-H 08	-
CADB-HE D/DI/DC 16	TPP-HE-H 16	-
CADB/T-HE D/DI/DC 21	TPP-HE-H 21	-
CADB/T-HE D/DI/DC 40	TPP-HE-H 40	TPP-HE-V 40
CADB/T-HE D/DI/DC 54	TPP-HE-H 54	TPP-HE-V 54

ELECTRIC ACCESSORIES FOR CADB/T-N PRO-REG SERIES

SCO_2-A
Ambient CO_2 and temperature sensor without display.
Output: 0-10V
Power supply: 24VDC

SCO_2-G 0/10V
CO_2 sensor for the duct.
Enables control of the ventilation in sections of duct according to the CO_2 concentration of the air circulating through it.

TDP-S
Pressure sensor.
Enables you to control the pressure in the fan inlet.

Control type

Model	VAV per CO_2		CAV	COP*
	Ambience	Duct		
CADB-HE D/DI/DC 04	SCO-2 A 0/10V	SCO-2 G 0/10V	TDP-S (2 units)	TDP-S
CADB-HE D/DI/DC 08	SCO-2 A 0/10V	SCO-2 G 0/10V	TDP-S (2 units)	TDP-S
CADB-HE D/DI/DC 16	SCO-2 A 0/10V	SCO-2 G 0/10V	TDP-S (2 units)	TDP-S
CADB/T-HE D/DI/DC 21	SCO-2 A 0/10V	SCO-2 G 0/10V	TDP-S (2 units)	TDP-S
CADB/T-HE D/DI/DC 40	SCO-2 A 0/10V	SCO-2 G 0/10V	TDP-S (2 units)	TDP-S
CADB/T-HE D/DI/DC 54	SCO-2 A 0/10V	SCO-2 G 0/10V	TDP-S (2 units)	TDP-S

*To independently control the supply and extract air it is necessary to install 2 pressure sensors TDP-S.

Standard

With by-pass (BP) (only for horizontal installation)

Static (without fan) high efficiency heat recovery units (up to 92%), with a low profile and light weight enabling them to be installed in false ceilings, designed to work with low consumption fans. Cabinet made of galvanised sheet steel with 10 mm thick polyurethane foam insulation (M1), totally hermetic, rubber gaskets inlet and outlet circular duct connections. Easy maintenance through access hatch. High-efficiency PVC counterflow-type heat exchanger.
Condensation drain and inlet and outlet filters (G2 grade) that can be changed without the use of tools.

CADS-HE BP models
Incorporating a motorised by-pass.
The by-pass enables part of the air extracted not to pass through the heat exchanger, when it is desired to cool the premises (with a lower outside temperature than the inside).
The by-pass is reversible, so it can adapt to different airflow layouts, supplying added or extracted air according to the configuration of the ducting system.

Additional information
G4 filters, as an accessory.

Easy maintenance
Cover for quick access to the heat exchanger and filters, to facilitate their cleaning or replacement.

Models with by-pass
BP models with a reversible by pass, which enables part of the extracted air not to pass through the heat exchanger.
Works with a motorised damper.

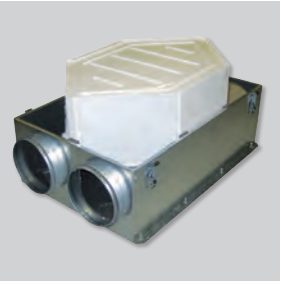

Heat exchanger
Counter flow high efficiency heat exchanger.

Specific applications

Multi dwelling blocks

Heat recovery units

TECHNICAL CHARACTERISTICS

Model	Efficiency	Maximum airflow (m^3/h)
CADS-HE 150	82 - 92 %	300
CADS-HE 160	82 - 92 %	300
CADS-HE BP 150	82 - 92 %	300
CADS-HE BP 160	82 - 92 %	300

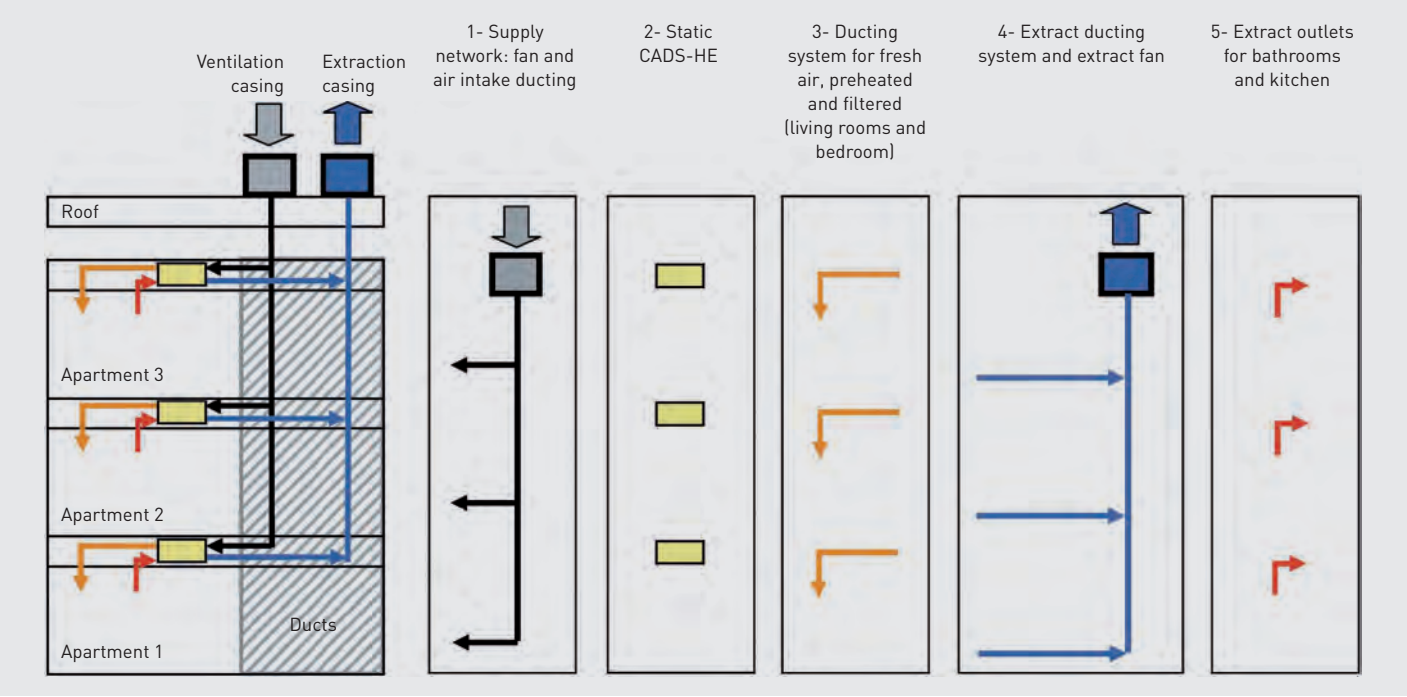

PERFORMANCE CURVES

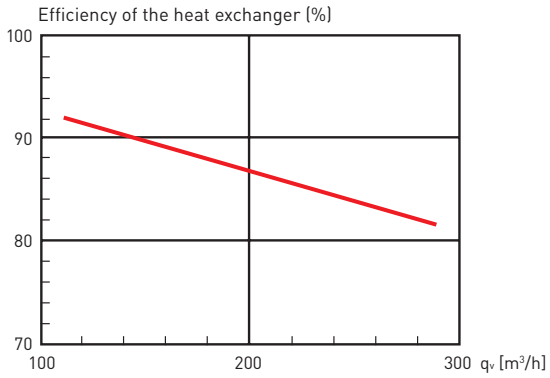

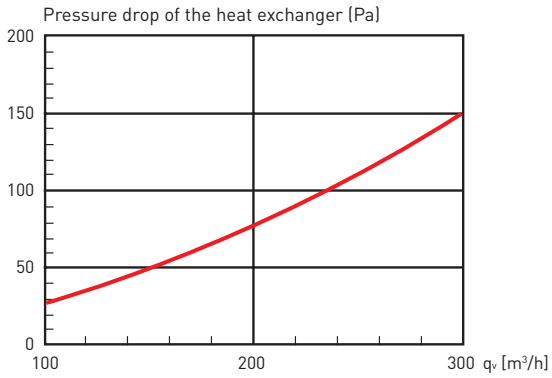

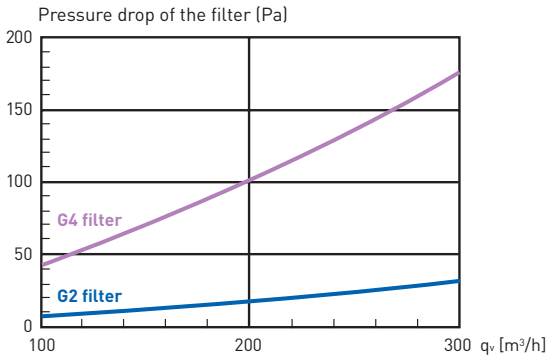

DIMENSIONS (mm)

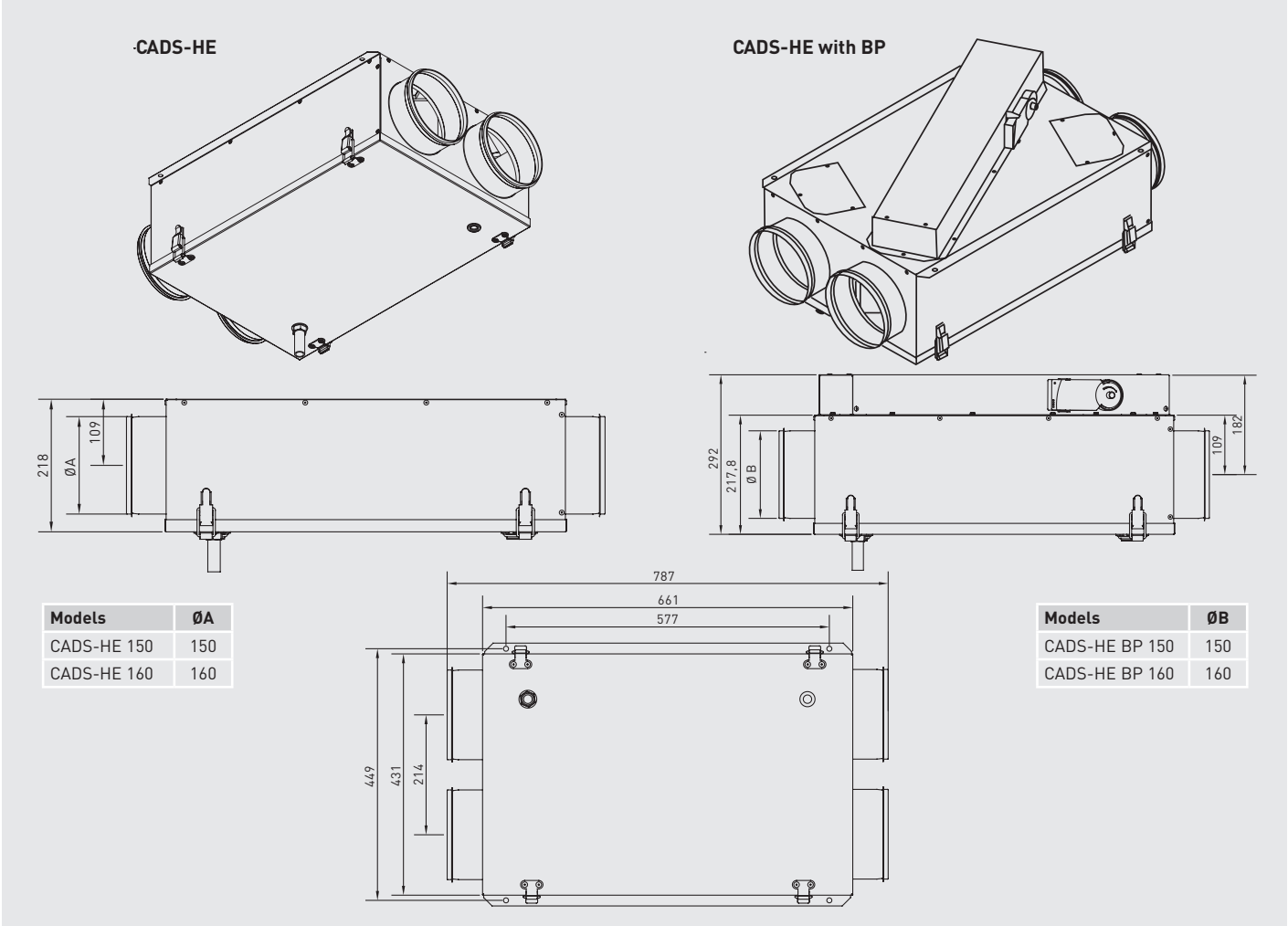

Models	ØA
CADS-HE 150	150
CADS-HE 160	160

Models	ØB
CADS-HE BP 150	150
CADS-HE BP 160	160

ACCESSORIES

G4 filter
G4 foam filter measuring 255x195 mm.

Plug & Play whole house heat recovery unit with a high-efficiency aluminium heat exchanger up to 92% and low consumption EC motors.
The casing is made of 25mm thick, self-supporting double skinned mineral wool isolated panels. The outer and the inner skin are white coated RAL 9003.
Easy access to all components via the front door.
Ensures a constant supply of fresh air and the exhausting of the waste air.
To optimise energy consumption at the same time as air quality, a proportional sensor can be connected (C02, Humidity).
It includes a 100% by-pass, which allows free cooling during the summertime.
To ensure a good air quality, the unit is equipped with a M5 filter at the inlet and a M5 filter at the outlet to protect the heat exchanger.
It is possible to fit an additional F7 post-filter (accessory).

Features

- M5 filters on the fresh air and the exhaust air sides to guarantee clean air and to protect the heat exchanger.
- F7 filter can be installed optionally.
- White coated galvanized steel casing of 25mm thick.
- Self-supporting double skin acoustically and thermally insulated panels.
- High-effcient backward curved centrifugal impellers (Bmax) with low consumption EC motors, single phase 230V, 50/60Hz.
- High-efficient aluminium counterflow heat exchanger.
- Nozzles Ø160mm.
- 100% automatic or manual by-pass.
- Remote control via cable.
- 3 speeds selection.
- Standby mode.

ectechnology

Specific applications

Multi dwelling blocks

Single dwellings

Heat recovery unit

MOUNTING AND INSTALLATION DETAILS

High-effcient fans with low consumption EC motor and counter-flow heat exchanger.

Anti-vibration mounts to avoid transmition of vibration to the wall.

USER-FRIENDLY MAINTENANCE

Slides facilitate fast changing and air tightness.

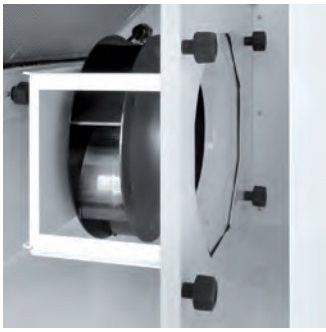

Easy access to filters and fans for changing and cleaning.

REMOTE CONTROL VIA CABLE (1,5 m included)

Remote control functions:

- Standby
- Speed selection (3 speeds)
- Manual bypass
- Filter alarm

TECHNICAL CHARACTERISTICS

Model	Airflow (m^3/h)	Power supply	Total motor power (W)	Maximum absorbed current (A)	Max. Sound pressure level at 3m*		
					Radiated	Inlet	Outlet
CAD HE 325 EC V BASIC	480	1~ 230V, 50Hz	230	1,3	37	43	49
CAD HE 450 EC V BASIC	540	1~ 230V, 50Hz	345	2,0	38	42	46

* Free field conditions.

THERMAL EFFICIENCY

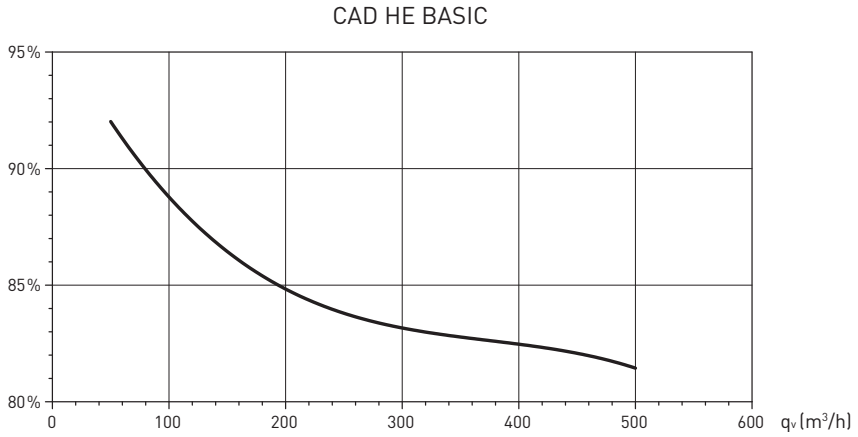

DIMENSIONS (mm)

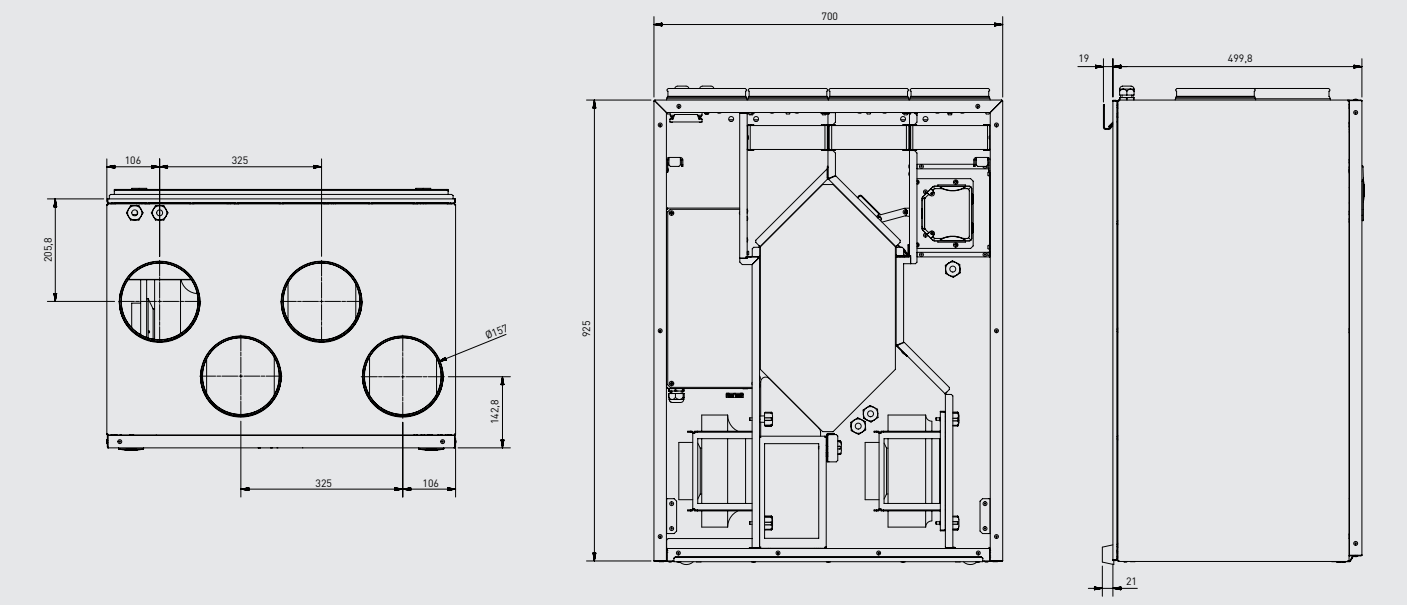

CHARACTERISTIC CURVE

- q_v: Air volume in m^3/h.
- p_{sf}: Static pressure in Pa.
- P: Input power in W.
- SFP: Specific fan power in $W/m^3/s$.
- Performance data in accordance with ISO 5801:1997.

CAD HE 325 EC V BASIC

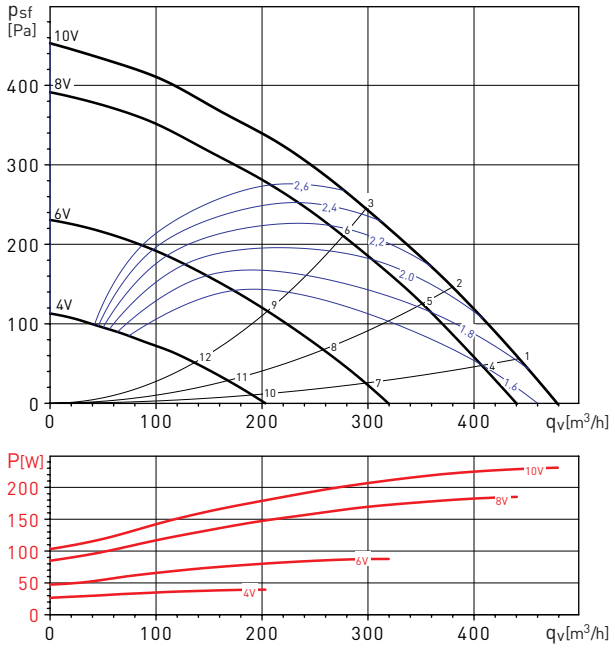

CAD HE 325 EC V BASIC		63	125	250	500	1000	2000	4000	8000	LwA	LpA*
1	Radiated	44	40	57	57	57	60	50	36	64	43
	Inlet	42	44	57	63	61	64	52	36	69	49
	Outlet	45	45	56	46	43	43	38	31	58	37
2	Radiated	49	51	57	65	65	65	53	48	71	50
	Inlet	43	50	59	68	65	67	56	49	73	53
	Outlet	48	53	56	53	49	48	43	43	63	42
3	Radiated	48	50	55	61	62	61	52	41	67	46
	Inlet	37	44	52	60	61	63	54	40	67	47
	Outlet	42	48	52	47	45	43	40	34	58	38
4	Radiated	42	39	56	55	55	58	48	34	62	42
	Inlet	40	42	55	61	59	62	50	34	66	45
	Outlet	43	43	54	44	41	41	36	29	56	35
5	Radiated	47	49	55	63	63	63	51	46	68	48
	Inlet	41	48	57	66	63	65	54	47	70	50
	Outlet	45	51	54	50	47	46	40	41	58	37
6	Radiated	45	47	52	59	59	59	50	39	64	44
	Inlet	35	42	50	58	59	61	52	38	65	44
	Outlet	40	46	50	44	43	41	38	32	53	33
7	Radiated	37	34	51	50	50	53	43	29	57	37
	Inlet	35	37	50	56	54	57	45	30	61	41
	Outlet	38	38	49	39	36	36	31	24	51	30
8	Radiated	42	44	50	58	58	58	46	40	63	43
	Inlet	36	43	52	61	59	60	49	42	65	45
	Outlet	41	46	49	46	42	41	36	36	53	33
9	Radiated	40	42	47	54	54	54	45	34	60	39
	Inlet	30	36	45	53	53	55	46	33	59	39
	Outlet	35	41	45	39	37	36	33	27	48	28
10	Radiated	30	27	44	43	44	46	36	23	51	30
	Inlet	28	30	43	50	47	50	38	23	54	34
	Outlet	32	32	43	32	29	29	24	17	44	23
11	Radiated	36	37	43	52	51	51	39	34	56	36
	Inlet	29	36	46	55	52	54	43	35	59	39
	Outlet	34	39	42	39	35	34	29	29	46	26
12	Radiated	34	36	41	47	48	47	38	27	53	32
	Inlet	23	30	38	47	47	49	40	27	53	33
	Outlet	29	34	38	33	31	30	26	21	42	21

* Free field conditions.

CAD HE 450 EC V BASIC

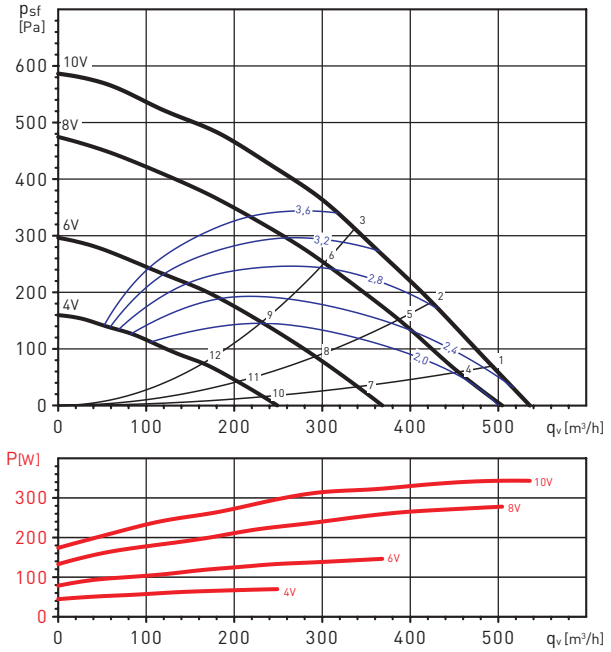

CAD HE 450 EC V BASIC		63	125	250	500	1000	2000	4000	8000	LwA	LpA*
1	Radiated	42	49	54	52	53	49	37	31	59	38
	Inlet	40	44	54	57	57	55	46	35	62	42
	Outlet	37	45	55	63	61	60	48	34	67	46
2	Radiated	42	48	53	46	43	40	34	29	55	35
	Inlet	44	47	55	59	58	56	46	35	64	43
	Outlet	37	45	55	62	60	59	47	34	66	45
3	Radiated	41	48	54	46	43	39	34	29	56	35
	Inlet	45	49	56	59	58	56	46	36	64	43
	Outlet	36	44	55	62	59	59	47	35	66	45
4	Radiated	40	48	54	49	51	47	35	29	58	37
	Inlet	37	42	52	55	55	53	44	32	60	40
	Outlet	35	43	55	61	59	58	46	32	65	44
5	Radiated	41	47	51	44	41	39	33	27	54	33
	Inlet	42	45	54	56	56	54	44	32	61	41
	Outlet	34	43	55	60	58	57	45	32	64	43
6	Radiated	39	47	52	43	40	37	32	26	54	34
	Inlet	41	45	54	55	55	53	44	32	61	40
	Outlet	34	42	55	59	57	56	45	32	63	43
7	Radiated	35	45	49	43	45	41	31	24	53	32
	Inlet	30	38	47	48	49	47	39	26	54	34
	Outlet	31	39	47	55	52	51	40	26	58	38
8	Radiated	34	44	48	37	35	32	29	24	50	30
	Inlet	35	41	48	48	50	48	38	26	55	34
	Outlet	28	38	46	53	51	50	40	26	57	36
9	Radiated	31	44	47	35	34	31	28	23	49	29
	Inlet	35	41	47	48	49	47	38	27	54	34
	Outlet	28	38	46	52	51	50	40	27	56	36
10	Radiated	28	40	41	34	37	34	26	23	45	25
	Inlet	25	34	40	41	42	41	32	23	47	27
	Outlet	27	34	41	45	43	43	34	23	50	29
11	Radiated	26	39	40	29	28	26	25	22	43	23
	Inlet	30	35	39	40	42	40	32	23	47	26
	Outlet	22	34	40	44	43	42	34	23	49	28
12	Radiated	27	39	38	29	28	26	25	22	42	22
	Inlet	27	36	39	40	41	40	32	23	47	26
	Outlet	23	34	39	43	42	42	34	23	48	28

* Free field conditions.

MOUNTING ACCESSORIES

SUP 450/150
Support base designed for floor installation.

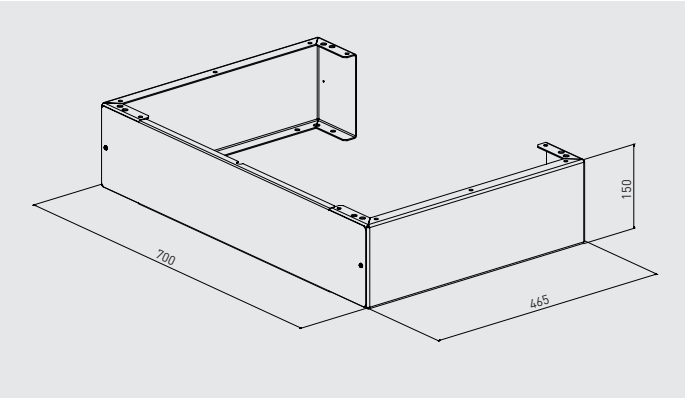

KIT 4 AF
Adjustable feet. Accessory designed for the support base that allows the leveling of the unit.

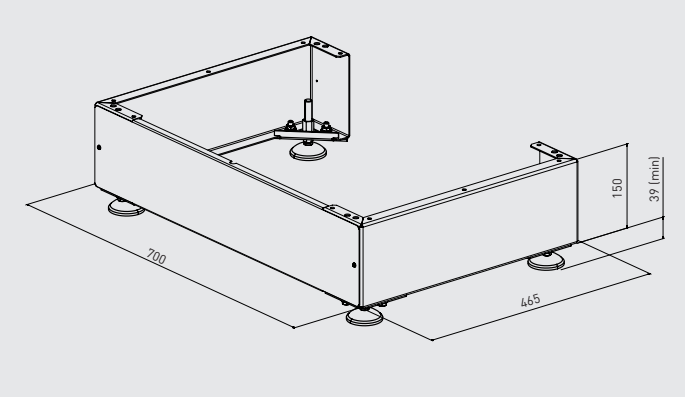

FILTERS M5 and F7
Filters AFR-300/450V-M5 and AFR-300/450V-F7.

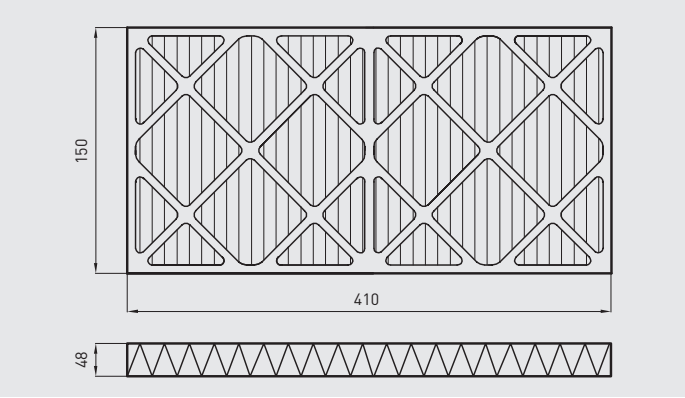

Constructive design of models RHE VD: Vertical discharge

AUTODESK REVIT

REVIT BIM LEVEL2

REVIT models available for all sizes and configurations

Constructive design of models RHE HDR: Horizontal discharge and acces from the right side.

FM REMOTE MONITORING

Compatible with the REMOTE MONITORING MODULE (see page 136) to allow SMS and email status alerts to be sent via web

PLUG & PLAY

Complete Control Package Integrated

RHE - standard range

RHE-SO - range with sorption exchanger wheel

RHE

Selection software

ectechnology

High efficient heat recovery units up to 88% with rotary wheel, plug-fans with backward curved blades and EC external-rotor motor.
Pre-configured control system for easy start-up.
The casing is made of 50 mm, self-supporting double skinned panels (mineral wool, 40 kg/m^3, thermal conductivity 0.037 W/ mK). The outer skin is made from coated steel (RAL7024) with a high resistance against corrosion (class: RC3) and UV light (class: RUV3) according to EN 10169 and the inner skin is made from galvanised steel.
Support feet are made from 3 mm, RAL9011 coated, 100 mm height (except RHE 6000 to 10000 models, which are base-mounted), with possibility to fit anti-vibration mounts or leveling feet (as accessories).
Easy access to all components via large hinged front doors.
Circular inlet and discharge connection flanges with EPDM rubber seal strip, VELODUCT© tightness class D up to size 3500 HD, rectangular connections for the sizes 4500 VD, 6000, 8000 and 10000.

Fan / Motor
Plug-fan with backward curved blades, external rotor EC motor with maintenance free ball bearings and permanent lubrication, with integrated electronic protection (locked-rotor, phase failure, under-voltage, over-temperature, short-circuit).
Protection IP54, Class B.
(RHE-8000 and 10000 models, Class F)

Application
Public buildings, offices, stores, schools, restaurants.

Range
Versions:
- horizontal discharge HD
- vertical discharge VD
- horizontal discharge for outdoor installation HD OI

Sizes: 700 m^3/h,1300 m^3/h, 1900 m^3/h, 2500 m^3/h, 3500 m^3/h,4500 m^3/h, 6000 m^3/h, 8000 m^3/h and 10000 m^3/h

Models:
- RHE D: without additional heater
- RHE DI: with built-in electric post-heating
- RHE DC: with built-in hot water coil
- RHE DFR: with built-in reversible hot/chilled water coil (chilled water coil)
- RHE DC/DF: with 2 independent integrated coils (chilled water and hot water).
- RHE DX: direct expansion integrated coil.

Control (Pulg&Play):
VAV- variable air volume
Fan speed can be adjusted with a 0 - 10V signal from the remote touchscreen panel (included) or an external CO_2, temperature or humidity sensor (accessories).
CAV - constant air volume
Manual pre-setting of 2 working points. The fans are controlled separately.
COP - constant pressure
Constant pressure measured by an external sensor (accessory).

REFERENCE

R	H	E	-	2	5	0	0	-	HDR	-	DC	-	OI	-	SO
1				2					3		4		5		6

1 - Serie.
2 - Size.
3 - **HDR:** Horizontal discharge and access from the right side.
HDL: Horizontal discharge and access from the left side.
VD: Vertical discharge.

4 - **D:** Standard range.
DI: Range with built-in electric heater.
DC: Range with built-in hot water battery.
DFR: Range with build in reversible water battery.
RHE DC/DF: with 2 separated integrated coils(chilled and hot water).
RHE DX: Integrated direct expansion coil.
5 - **OI:** Outdoor installation.
6 - **SO:** Sorption wheel.

VERSIONS ACCORDING TO ACCESS SIDE

The access side is defined by the direction of supply air.

HDR models, with access from the right side.

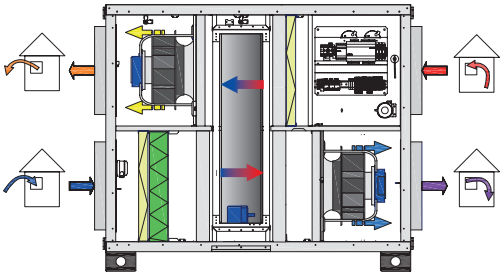

HDL models, with access from the left side.

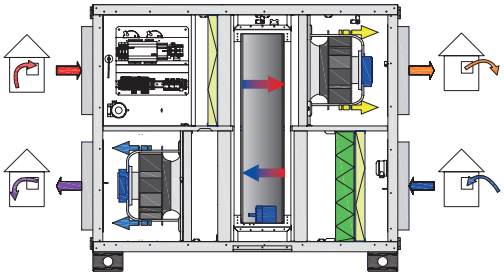

Only models with horizontal discharge are available with access from different sides.

COMPONENTS ACCORDING TO VERSIONS

Electric heater battery (DI)
- Heater elements are made of stainless Steel AISI 430.
- Built-in overheating protection thermostat with automatic reset at 70ºC and manual reset at 120ºC.

Hot water coil (DC)
- 2 row hot water coil made of copper pipes and aluminium fins.
- Motorized (24V) 3 way valve for proportional (0-10V) control (accessory).
- Anti-frost protection by clamp-on temperature sensor to the return flow pipe.

Hot / Chilled water, reversible coil (DFR) (Only for HD version available)
- 2 row hot water coil made of copper pipes and aluminium fins.
- Motorized (24V) 3 way valve for proportional (0-10V) control (accessory).
- Anti-frost protection by clamp-on temperature sensor to the return flow pipe.
- With welded stainless steel condensate dip tray and droplet separator.
- Condensate drain (diameter ½") located under the unit. It has to be connected to a siphon.
- Built-in changeover thermostat (THCO) which controls a mixing valve depending on the outdoor temperature.

Hot water coil+ chilled water coil (DC/DF) (only for 6000, 8000 and 10000 models).
- 2 row coils in hot water and chilled water.
- Anti-frost protection by clamp-on temperature sensor to the return flow pipe.
- Construction:
  - Copper tubes and collectors.
  - Tubes with threaded connection.
  - Aluminium fins.
  - Galvanised steel frame.
- 3-way motorised valves (24V) for proportional controll 0-10V (accessory).
  - With condensate tray of stainless steel.

Direct expansion coil (DX) only for HD versions, provided without control
- 2 or 3 row coils, designed to operate in evaporation mode or in condensation mode.
- Construction:
  - Copper tubes and collectors.
  - Aluminium fins.
  - Galvanised steel frame.
  - With condensate tray of stainless steel.

Filter
- M5 filter on the extract air side to protect the heat exchanger.
- G4 and F7 filters on the outdoor air side.
- The filter clogging is checked by differential pressure sensor measuring and transmitting the pressure drop to the control.

Control system
- Built-in programmable control system (Plug & Play).
- MODBUS RTU (RS485) and BACNET IP communication protocol.
- Remote touchscreen panel (ETD) included.

CONTROL SYSTEM
FEATURES AND FUNCTIONS

RHE control system	D	DI	DC	DFR	DC/DF	FX
MAIN COMPONENTS						
Internal electrical box – composition:						
• Main power connection switch / safety circuit breaker	●	●	●	●	●	●
• Controller and terminal strip integrated into the unit, easy access main side	●	●	●	●	●	●
FUNCTIONS						
Air flow control						
• Constant air volume (CAV): 2 different setpoint speed on supply and exhaust air	●	●	●	●	●	●
• Variable air volume (VAV): signal 0-10V coming from an outdoor probe (CO_2 ,temperature, relative humidity, etc.) or a manual percentage across the control panel	●	●	●	●	●	●
• Constant pressure (COP) value measured by an outdoor pressure sensor (SPRD+KTPR = Accessories)	●	●	●	●	●	●
• Time programming (week timer, Holiday periods...)	●	●	●	●	●	●
• Extending running BOOST by external contact demand	●	●	●	●	●	●
• On/Off system by external contact	●	●	●	●	●	●
Temperature control						
Temperature sensor:						
• Outdoor air temperature sensor	●	●	●	●	●	●
• Extract air temperature sensor	●	●	●	●	●	●
• Supply air temperature sensor	●	●	●	●	●	●
• Anti-frost sensor on water coil (DC-DFR)			●	●	●	
• «CHANGE OVER» thermostat installed on water input pipe (DFR)				●		
Free cooling by switching off the heat exchanger rotation (Intermitant rotation of wheel reduces risk of dust clogging)	●	●	●	●	●	●
Outdoor air damper actuator control (damper-accessory)	●	●	●	●	●	●
Internal electric heater battery control:						
• Proportional control (PWM)		●			●	
Internal water coil control:						
• Motorized 3 way valve proportional 0-10 V unmounted			◎	◎	◎	
• Airflow regulation via 3-way valve.			●	●	●	
External water coil(s) control:						
• Power control of the external hot or chilled water coil by a proportional signal 0-10V	◎ (1)	◎ (1)	◎ (2)	◎ (3)		
• Supply air duct sensor TGK3 PT1000	◎	◎	◎	◎		
• Anti-frost sensor on water coil TGA1 PT1000	◎	◎		◎		
• CHANGE OVER thermostat to be installed on water input pipe	◎	◎				
Security and alarm control						
• Filter clogging indication	●	●	●	●	●	●
• Malfunction of connected sensor	●	●	●	●	●	●
• Malfunction of fan	●	●	●	●	●	●
• Result deviates too much from the set point (Airflow, Pressure, T°)	●	●	●	●	●	●
• Fire alarm (contact available)	●	●	●	●	●	●
• Communication failure between controler and display control	●	●	●	●	●	●
• Anti-frost protection for the water coil (force the heating valve to open thereby preventing freeze-up of the heater if water T° lower than 7°C on heating mode - stop the unit if the water T° do not increase)	●	●	●	●	●	
• Alarm management (40 latest alarms)	●	●	●	●	●	●
Communication						
• Remote touch screen panel	●	●	●	●	●	●
• Maintenance display DSP	◎	◎	◎	◎	◎	◎
• MODBUS RTU (RS485) and BACNET IP communication protocol.	●	●	●	●	●	●
• BACNET IP	●	●	●	●	●	●

● Included
◎ Accessory
(1) hot or chilled water coil, (2) chilled water coil, (3) hot water coil

TECHNICAL CHARACTERISTICS

Hot water coil data DC for units with vertical discharge (VD)

RHE 700 VD – Airflow 700 m³/h

Outdoor Air (ODA)	Extract Air (ETA)	Supply Air (SUP) before DC coil	Water T° (ºC)	Heating Power (kW)	Supply Air (SUP) after DC coil (ºC)	Relative Humidity Supply Air (% RH)	Air Pressure Drop (Pa)	Water flow (l/h)	Water pressure drop (kPa)	DC Coil connection Ø (mm)
-10°C -90% HR	20°C 50% HR	15°C – 47% HR	45/40	2,99	28	22	27	517	7,5	1/2"
			60/40	3,15	28	21	27	137	4,8	1/2"
			80/60	5,73	39	11	28	253	5,2	1/2"
			90/70	6,97	44	9	28	390	5,5	1/2"

RHE 1300 VD – Airflow 1300 m³/h

Outdoor Air (ODA)	Extract Air (ETA)	Supply Air (SUP) before DC coil	Water T° (ºC)	Heating Power (kW)	Supply Air (SUP) after DC coil (ºC)	Relative Humidity Supply Air (% RH)	Air Pressure Drop (Pa)	Water flow (l/h)	Water pressure drop (kPa)	DC Coil connection Ø (mm)
-10°C -90% RH	20°C 50% RH	12°C – 53% RH	45/40	4,8	23	26	84	846	12	1/2"
			60/40	5,14	24	25	84	224	5,1	1/2"
			80/60	8,86	32	26	84	391	6,2	1/2"
			90/70	10,71	36	12	84	475	6,8	1/2"

RHE 1900 VD – Airflow 1900 m³/h

Outdoor Air (ODA)	Extract Air (ETA)	Supply Air (SUP) before DC coil	Water T° (ºC)	Heating Power (kW)	Supply Air (SUP) after DC coil (ºC)	Relative Humidity Supply Air (% RH)	Air Pressure Drop (Pa)	Water flow (l/h)	Water pressure drop (kPa)	DC Coil connection Ø (mm)
-10°C -90% RH	20°C 50% RH	12°C – 51% RH	45/40	7,85	24	23	67	1358	33,9	1/2"
			60/40	8,77	25	21	67	382	6,9	1/2"
			80/60	14,4	34	13	67	637	10,2	1/2"
			90/70	17,3	39	10	67	767	12,4	1/2"

RHE 2500 VD – Airflow 2500 m³/h

Outdoor Air (ODA)	Extract Air (ETA)	Supply Air (SUP) before DC coil	Water T° (ºC)	Heating Power (kW)	Supply Air (SUP) after DC coil (ºC)	Relative Humidity Supply Air (% RH)	Air Pressure Drop (Pa)	Water flow (l/h)	Water pressure drop (kPa)	DC Coil connection Ø (mm)
-10°C -90% RH	20°C 50% RH	13°C – 51% RH	45/40	10,67	25	23	49	1848	25	3/4"
			60/40	12,05	27	21	49	525	6,3	3/4"
			80/60	20,02	36	12	49	883	8,9	3/4"
			90/70	24	41	9	49	1065	10,6	3/4"

RHE 3500 VD – Airflow 3500 m³/h

Outdoor Air (ODA)	Extract Air (ETA)	Supply Air (SUP) before DC coil	Water T° (ºC)	Heating Power (kW)	Supply Air (SUP) after DC coil (ºC)	Relative Humidity Supply Air (% RH)	Air Pressure Drop (Pa)	Water flow (l/h)	Water pressure drop (kPa)	DC Coil connection Ø (mm)
-10°C -90% RH	20°C 50% RH	13°C – 51% RH	45/40	15,3	26	23	44	2655	34,3	3/4"
			60/40	17,4	28	20	44	762	7,1	3/4"
			80/60	28,8	37	12	44	1272	10,8	3/4"
			90/70	34,5	42	8	44	1531	13	3/4"

RHE 4500 VD – Airflow 4500 m³/h

Outdoor Air (ODA)	Extract Air (ETA)	Supply Air (SUP) before DC coil	Water T° (ºC)	Heating Power (kW)	Supply Air (SUP) after DC coil (ºC)	Relative Humidity Supply Air (% RH)	Air Pressure Drop (Pa)	Water flow (l/h)	Water pressure drop (kPa)	DC Coil connection Ø (mm)
-10°C - 90% HR	20°C 50% HR	11,5°C – 53% HR	45/39	18,41	24	24	68	2656	35,5	3/4"
			60/40	21,32	25	22	68	929	8,3	3/4"
			80/60	34,67	34	13	69	1529	13,3	3/4"
			90/70	41,3	39	11	69	1833	16,4	3/4"

TECHNICAL CHARACTERISTICS

Water coil data for units with horizontal discharge, hot water or reversible hot/chilled water coil DC/DFR

RHE 700 HD – Airflow 700 m³/h

Outdoor Air (ODA)	Extract Air (ETA)	Supply Air (SUP) before DC/DFR coil	Water T° (ºC)	Heating Power (kW)	Supply Air (SUP) after DC/DFR coil (ºC)	Relative Humidity Supply Air (% RH)	Air Pressure Drop (Pa)	Water flow (l/h)	Water pressure drop (kPa)	DC/DFR Coil connection Ø (mm)
-10°C - 90% HR	20°C 50% HR	15°C – 47% HR	45/40	3,48	29	19	14	602	9,7	1/2"
			60/40	3,97	31	17	14	173	5	1/2"
			80/60	6,78	43	9	14	299	5,8	1/2"
			90/70	8,17	49	7	14	363	6,3	1/2"
35ºC - 40% HR	26°C - 50% HR	27,5°C – 61% HR	07/12	2,42	21	82	34	417	7,6	1/2"

RHE 1300 HD – Airflow 1300 m³/h

Outdoor Air (ODA)	Extract Air (ETA)	Supply Air (SUP) before DC/DFR coil	Water T° (ºC)	Heating Power (kW)	Supply Air (SUP) after DC/DFR coil (ºC)	Relative Humidity Supply Air (% RH)	Air Pressure Drop (Pa)	Water flow (l/h)	Water pressure drop (kPa)	DC/DFR Coil connection Ø (mm)
-10°C -90% RH	20°C 50% RH	12,3°C – 53% RH	45/40	5,81	25	23	44	1006	18,2	1/2"
			60/40	6,47	27	21	44	282	5,8	1/2"
			80/60	10,7	36	12	44	474	7,6	1/2"
			90/70	12,8	41	9	44	571	8,8	1/2"
35ºC - 40% RH	26°C 50% RH	28,3°C – 58% RH	07/12	3,56	22	77	92	612	10,7	1/2"

RHE 1900 HD – Airflow 1900 m³/h

Outdoor Air (ODA)	Extract Air (ETA)	Supply Air (SUP) before DC/DFR coil	Water T° (ºC)	Heating Power (kW)	Supply Air (SUP) after DC/DFR coil (ºC)	Relative Humidity Supply Air (% RH)	Air Pressure Drop (Pa)	Water flow (l/h)	Water pressure drop (kPa)	DC/DFR Coil connection Ø (mm)
-10°C -90% RH	20°C 50% RH	12°C – 51% RH	45/40	8,9	26	21	37	1542	16,7	3/4"
			60/40	9,98	27	19	37	435	5,7	3/4"
			80/60	16,4	37	11	37	724	7,3	3/4"
			90/70	19,6	42	8	37	871	8,3	3/4"
35ºC - 40% RH	26°C 50% RH	28°C – 58% RH	07/12	5,47	22	78	79	940	10,2	3/4"

RHE 2500 HD – Airflow 2500 m³/h

Outdoor Air (ODA)	Extract Air (ETA)	Supply Air (SUP) before DC/DFR coil	Water T° (ºC)	Heating Power (kW)	Supply Air (SUP) after DC/DFR coil (ºC)	Relative Humidity Supply Air (% RH)	Air Pressure Drop (Pa)	Water flow (l/h)	Water pressure drop (kPa)	DC/DFR Coil connection Ø (mm)
-10°C -90% RH	20°C 50% RH	13°C – 51% RH	45/40	11,7	27	21	33	2032	37,9	3/4"
			60/40	13,5	29	18	33	591	7,4	3/4"
			80/60	22,1	39	10	33	978	11,3	3/4"
			90/70	26,4	44	8	33	1175	13,7	3/4"
35°C -40% RH	26°C 50% RH	28°C – 59% RH	7/12	7,6	22	78	72	1307	19,7	3/4"

RHE 3500 HD – Airflow 3500 m³/h

Outdoor Air (ODA)	Extract Air (ETA)	Supply Air (SUP) before DC/DFR coil	Water T° (ºC)	Heating Power (kW)	Supply Air (SUP) after DC/DFR coil (ºC)	Relative Humidity Supply Air (% RH)	Air Pressure Drop (Pa)	Water flow (l/h)	Water pressure drop (kPa)	DC/DFR Coil connection Ø (mm)
-10°C -90% RH	20°C 50% RH	13°C – 51% RH	45/40	16,8	27	21	28	2910	30,6	3/4"
			60/40	19,3	29	19	28	843	6,8	3/4"
			80/60	31,7	40	10	28	1400	10	3/4"
			90/70	37,9	45	8	28	1683	11,9	3/4"
35°C -40% RH	26°C 50% RH	28°C – 59% RH	07/12	10,9	22	79	63	1873	16,5	3/4"

RHE 4500 HD – Airflow 4500 m³/h

Outdoor Air (ODA)	Extract Air (ETA)	Supply Air (SUP) before DC/DFR coil	Water T° (ºC)	Heating Power (kW)	Supply Air (SUP) after DC/DFR coil (ºC)	Relative Humidity Supply Air (% RH)	Air Pressure Drop (Pa)	Water flow (l/h)	Water pressure drop (kPa)	DC/DFR Coil connection Ø (mm)
-10°C - 90% HR	20°C 50% HR	11,5°C – 53% HR	45/40	20,86	25	22	43	3611	4,5	3/4"
			60/40	23,7	27	20	43	1033	7,9	3/4"
			80/60	38,37	37	11	43	1692	12,2	3/4"
			90/70	45,67	41	9	43	2027	14,9	3/4"
35ºC - 40% HR	26°C - 50% HR	28,5°C – 58% HR	07/12	12,89	23	77	95	2216	21,8	3/4"

TECHNICAL CHARACTERISTICS

Water coil data for units with horizontal discharge, hot water or reversible hot/chilled water coil DC/DFR

RHE 6000 HD – Airflow 6000 m³/h										
Outdoor Air (ODA)	Extract Air (ETA)	Supply Air (SUP) before DC/DFR coil	Water T° (ºC)	Heating Power (kW)	Supply Air (SUP) after DC/DFR coil (ºC)	Relative Humidity Supply Air (% RH)	Air Pressure Drop (Pa)	Water flow (l/h)	Water pressure drop (kPa)	DC/DFR Coil connection Ø (mm)
-10°C 90% RH	20°C 50% RH	13°C – 48% RH	45/40	26,38	26	21	37	4568	15	1"
			60/40	29,35	28	20	37	1279	5,5	1"
			80/60	49,51	38	11	37	2184	7	1"
			90/70	59,55	42	9	37	2643	8	1"
35°C -40% RH	26°C -50% RH	28°C – 59% RH	07/12	16,57	22	78	84	2847	9,7	1"

RHE 8000 HD – Airflow 8000 m³/h										
Outdoor Air (ODA)	Extract Air (ETA)	Supply Air (SUP) before DC/DFR coil	Water T° (ºC)	Heating Power (kW)	Supply Air (SUP) after DC/DFR coil (ºC)	Relative Humidity Supply Air (% RH)	Air Pressure Drop (Pa)	Water flow (l/h)	Water pressure drop (kPa)	DC/DFR Coil connection Ø (mm)
-10°C 90% RH	20°C 50% RH	13°C – 48% RH	45/40	36,45	27	21	32	6311	15,7	1¼"
			60/40	40,81	28	19	32	1779	5,6	1¼"
			80/60	68,57	38	11	32	3024	7,2	1¼"
			90/70	82,35	46	8	32	3655	8,2	1¼"
35°C -40% RH	26°C -50% RH	28°C – 59% RH	07/12	23,1	22	78	72	3981	10,1	1¼"

RHE 10000 HD – Airflow 10000 m³/h										
Outdoor Air (ODA)	Extract Air (ETA)	Supply Air (SUP) before DC/DFR coil	Water T° (ºC)	Heating Power (kW)	Supply Air (SUP) after DC/DFR coil (ºC)	Relative Humidity Supply Air (% RH)	Air Pressure Drop (Pa)	Water flow (l/h)	Water pressure drop (kPa)	DC/DFR Coil connection Ø (mm)
-10°C 90% RH	20°C 50% RH	13°C – 51% RH	45/40	46	27	22	29	8019	22	1¼"
			60/40	52	28	20	29	2290	6,1	1¼"
			80/60	87	39	12	29	3864	8,4	1¼"
			90/70	105	44	8	29	4662	9,9	1¼"
35°C -40% RH	26°C -50% RH	28°C – 60% RH	07/12	30	22	80	68	5227	13,2	1¼"

TECHNICAL CHARACTERISTICS

Direct expansion coils (DX) data- Condensation

Fluid R410A - Condensation Tº 40°C

Outdoor Air (ODA)	Extract Air (ETA)	Supply Air (SUP) before DX coil	Heating Power (kW)	Supply Air (SUP) after DX coil (ºC)	Relative Humidity Supply Air (% RH)	Air Pressure Drop (Pa)	Water flow (l/h)	Water pressure drop (kPa)	DX Coil connection Ø (mm)
-10°C 90% HR	20°C 50% HR	RHE 700 HD - Airflow 700 m³/h							
		15°C 47%HR	2,6	25,7	24	10	49	0,03	12/05
		RHE 1300 HD - Airflow 1.600 m³/h							
		12,3°C 50%HR	4,8	21,1	28	46	92	0,08	12/05
		RHE 1900 HD - Airflow 2.100 m³/h							
		12°C 51%HR	7,9	23,2	25	51	151	0,05	22/12
		RHE 2500 HD - Airflow 2.800 m³/h							
		13°C 51%HR	10,6	24,1	25	44	204	0,03	22/12
		RHE 3500 HD - Airflow 3.500 m³/h							
		13°C 51%HR	10,6	25,3	24	36	280	0,06	22/12
		RHE 4500 HD - Airflow 4.500 m³/h							
		11°C 53%HR	10,6	23,1	24	56	357	0,1	22/12
		RHE 6000 HD - Airflow 6.000 m³/h							
		13°C 48%HR	24	24,8	23	42	461	0,05	28/12
		RHE 8000 HD - Airflow 8.000 m³/h							
		13°C 48%HR	32,2	24,8	23	33	617	0,03	28/12
		RHE 10000 HD - Airflow 10.000 m³/h							
		13°C 51%HR	40,8	25,4	24	34	782	0,03	35/12

Direct expansion coils (DX) data- Evaporation

Fluid R410A - Evaporation Tº 4°C

Outdoor Air (ODA)	Extract Air (ETA)	Supply Air (SUP) before DX coil	Heating Power (kW)	Supply Air (SUP) after DX coil (ºC)	Relative Humidity Supply Air (% RH)	Air Pressure Drop (Pa)	Water flow (l/h)	Water pressure drop (kPa)	DX Coil connection Ø (mm)
35°C 40% HR	26°C 50% HR	RHE 700 HD - Airflow 700 m³/h							
		27°C 61%HR	3,2	18,9	84	31	63	0,18	05/12
		RHE 1300 HD - Airflow 1.600 m³/h							
		28°C 57%HR	5,2	21,4	77	117	99	0,42	05/12
		RHE 1900 HD - Airflow 2.100 m³/h							
		28°C 57%HR	9	19,8	81	119	174	0,29	12/22
		RHE 2500 HD - Airflow 2.800 m³/h							
		28°C 57%HR	12,7	19,5	82	104	246	0,22	12/22
		RHE 3500 HD - Airflow 3.500 m³/h							
		28°C 57%HR	14,9	19,8	82	85	290	0,25	12/22
		RHE 4500 HD - Airflow 4.500 m³/h							
		28°C 57%HR	16,9	20,5	80	127	330	0,32	12/22
		RHE 6000 HD - Airflow 6.000 m³/h							
		13°C 48%HR	27,3	19,4	82	101	530	0,31	12/28
		RHE 8000 HD - Airflow 8.000 m³/h							
		13°C 48%HR	38,2	19,1	82	81	745	0,17	22/28
		RHE 10000 HD - Airflow 10.000 m³/h							
		13°C 51%HR	48,4	19,6	83	83	942	0,21	22/35

ELECTRICAL CHARACTERISTICS

All models (except DI model)

Model	Heat exchanger motor (1)			Fan motor (2)				Global unit		
	Power supply voltage	Nominal power (W)	Current (A)	Voltage (V)	Frequency (Hz)	Max. absorbed power (W)	Current (A)	Power supply voltage	Total supply power (kW)	Total current max. (A)
RHE 700	230 V single phase	40	0,20	230 V single phase	50/60	200	1,6	230 V single phase	1	4,2
RHE 1300	230 V single phase	40	0,20	230 V single phase	50/60	700	3,0	230 V single phase	2	7,3
RHE 1900	230 V single phase	40	0,20	230 V single phase	50/60	715	3,1	230 V single phase	2	7,5
RHE 2500	400 V three phase	55	0,28	400 V three phase + N	50/60	1000	1,6	400 V three phase + N	3	4,5
RHE 3500	400 V three phase	55	0,28	400 V three phase + N	50/60	1000	1,7	400 V three phase + N	3	4,6
RHE 4500	400 V three phase	55	0,28	400 V three phase + N	50/60	1850	2,9	400 V three phase + N	4	7,2
RHE 6000	400 V three phase	55	0,28	400 V three phase + N	50/60	1850	2,9	400 V three phase + N	4	7,2
RHE 8000	400 V three phase	120	0,35	400 V three phase + N	50/60	2730	4,2	400 V three phase + N	6	9,8
RHE 10000	400 V three phase	120	0,35	400 V three phase + N	50/60	3000	4,6	400 V three phase	6,5	10,5

(1) 1 wheel drive motor per unit (2) Data for 1 fan motor - Each unit has 2 fan motors.

DI Models

Model	Heat exchanger motor (1)			Fan motor (2)				Global unit		
	Power supply voltage	Nominal power (W)	Current (A)	Voltage (V)	Frequency (Hz)	Max. absorbed power (W)	Current (A)	Power supply voltage	Total supply power (kW)	Total current max. (A)
RHE 700	230 V single phase	40	0,20	230 V single phase	50/60	200	1,6	230 V single phase	4	17,3
RHE 1300	230 V single phase	40	0,20	230 V single phase	50/60	700	3,0	230 V single phase	6	24,6
RHE 1900	230 V single phase	40	0,20	230 V single phase	50/60	715	3,1	230 V single phase	10	42,2
RHE 2500	400 V three phase	55	0,28	400 V three phase + N	50/60	1000	1,6	400 V three phase + N	15	21,8
RHE 3500	400 V three phase	55	0,28	400 V three phase + N	50/60	1000	1,7	400 V three phase + N	18	26,3
RHE 4500	400 V three phase	55	0,28	400 V three phase + N	50/60	1850	2,9	400 V three phase + N	19	29,0
RHE 6000	400 V three phase	55	0,28	400 V three phase + N	50/60	1850	2,9	400 V three phase + N	28	41,9
RHE 8000	400 V three phase	120	0,35	400 V three phase + N	50/60	2730	4,2	400 V three phase + N	42	61,8
RHE 10000	400 V three phase	120	0,35	400 V three phase + N	50/60	3000	4,6	400 V three phase + N	55	79,8

(1) 1 wheel drive motor per unit (2) Data for 1 fan motor - Each unit has 2 fan motors.

Electric heater battery	
Unit power (kW)	Unit current (A)
3	13,1
4	17,4
8	34,8
12	17,3
15	21,7
15	21,7
24	34,7
36	52,0
48	69,3

ACOUSTIC CHARACTERISTICS

The acoustic characteristics of each RHE model variant at the required duty point is available from the S&P Selection Program. Visit http://easyvent.solerpalau.com or contact: technical.uk@solerpalau.com for further details.

SCHEMATIC DIAGRAM

RHE DC-DFR
Control system for water coil

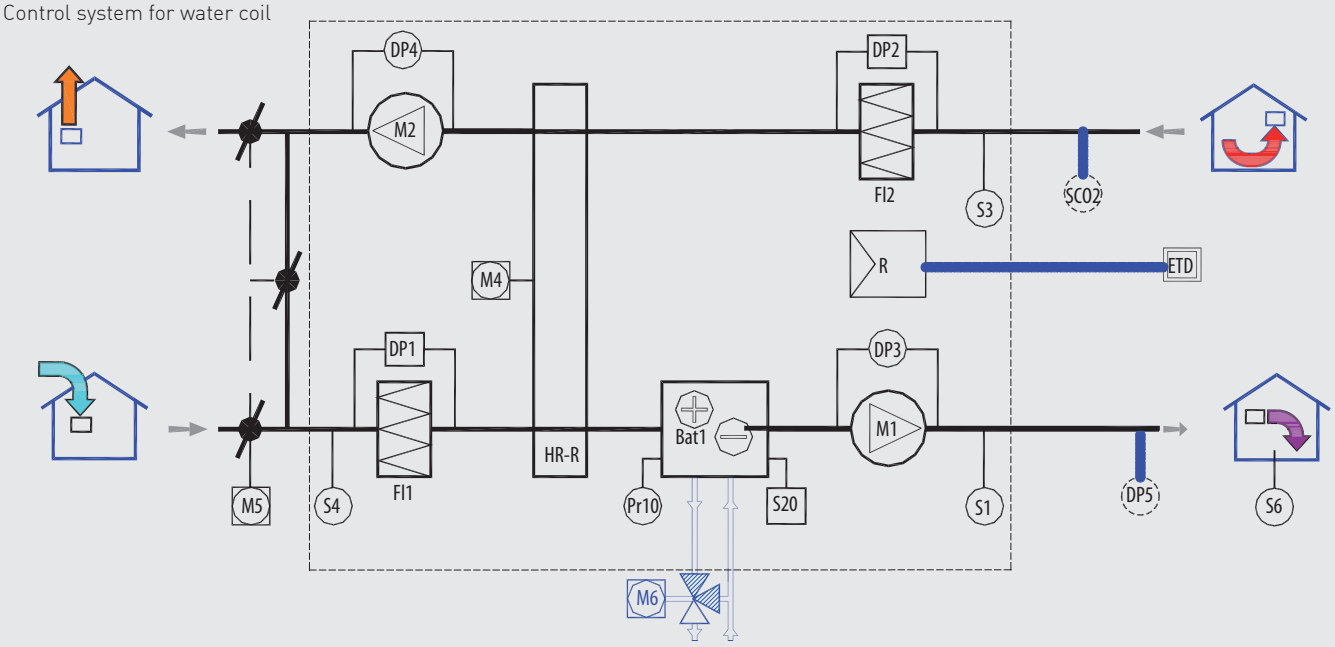

RHE DI
Control system for electric heater battery

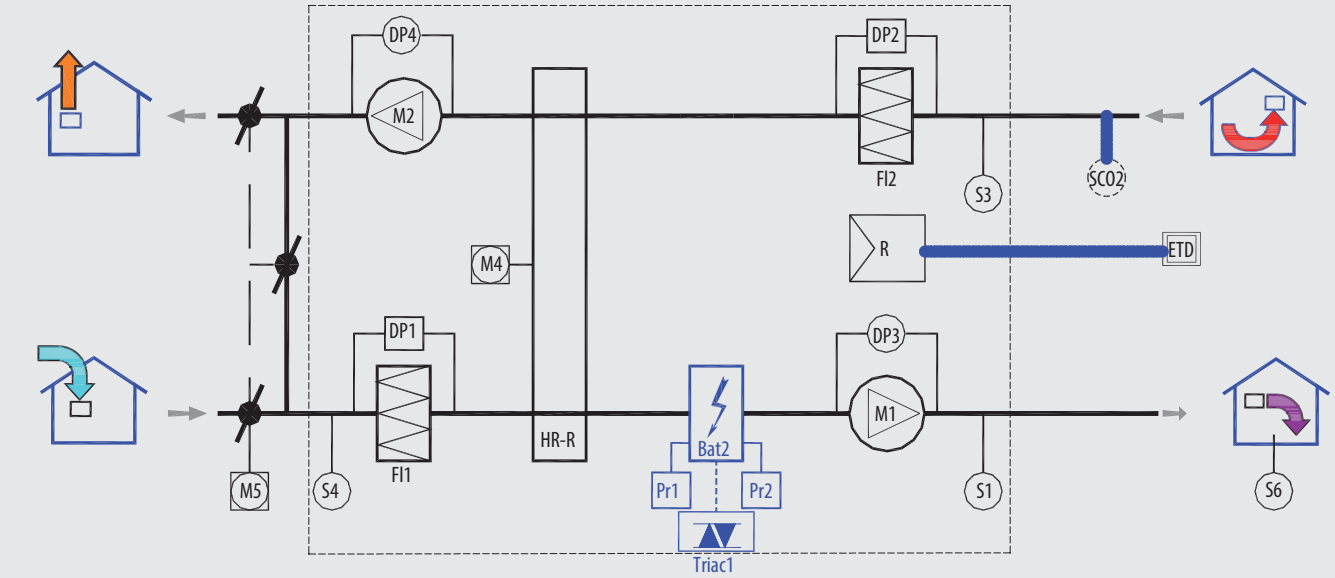

M1	Supply air fan motor	SCO2	Air quality sensor (accessory)	Pr10	Antifrost sensor
M2	Exhaust air fan motor	HR-R	Rotary wheel	Pr1/Pr2	Security thermostat (manu/auto)
M4	Rotary exchanger motor	Fi1	Outdoor air filters	S20	Thermostat change-over
M5	Fresh air motorized damper (accessory)	Fi2	Extract air filter	Bat 1	Water coil
M6	3 way valve actuator (accessory)	DP1	Outdoor air filter pressure guard	Bat 2	Electrical heating resistance
S1	Supply air T° sensor	DP2	Extract air filter pressure guard	R	Controler CORRIGO E28
S3	Extract air T° sensor	DP3	Supply air fan pressure transmitter	ETD	Room touch screen display
S4	Outdoor T° sensor	DP4	Exhaust air fan pressure transmitter		
S6	Room T° sensor	DP5	Duct pressure transmitter (accessory)		

SCHEMATIC DIAGRAM

RHE DC/DF (models 6000, 8000 and 10000)
Control system for 2 water coils

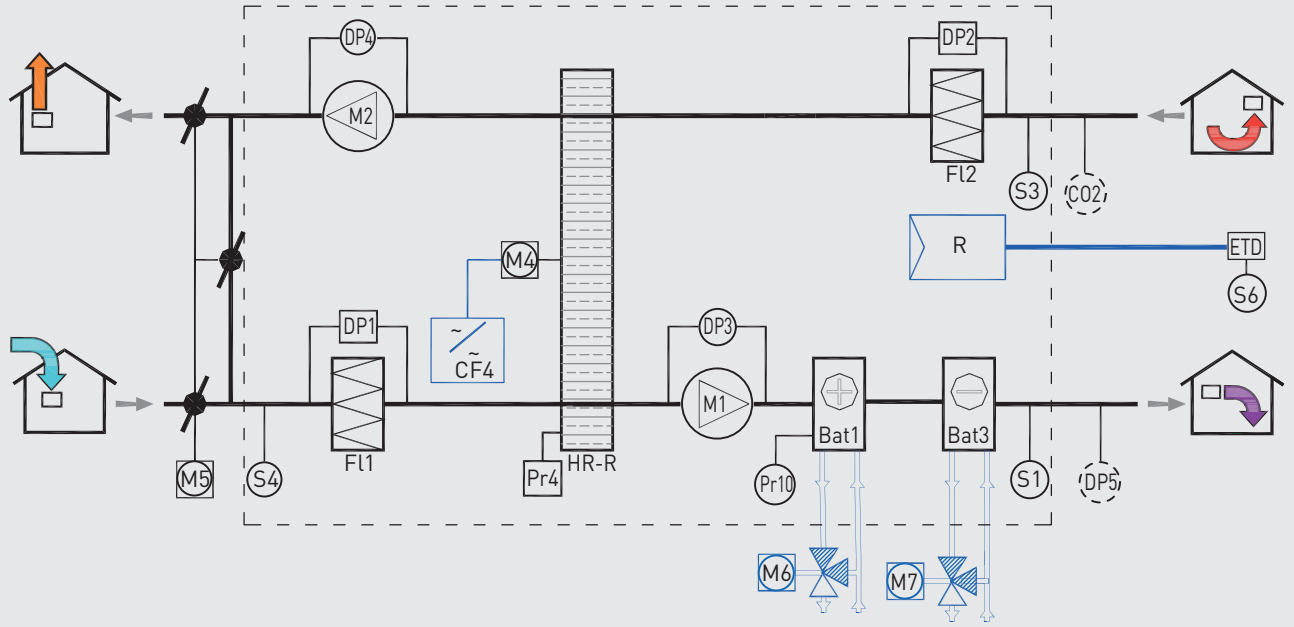

RHE DX
Control system for direct expansion coils

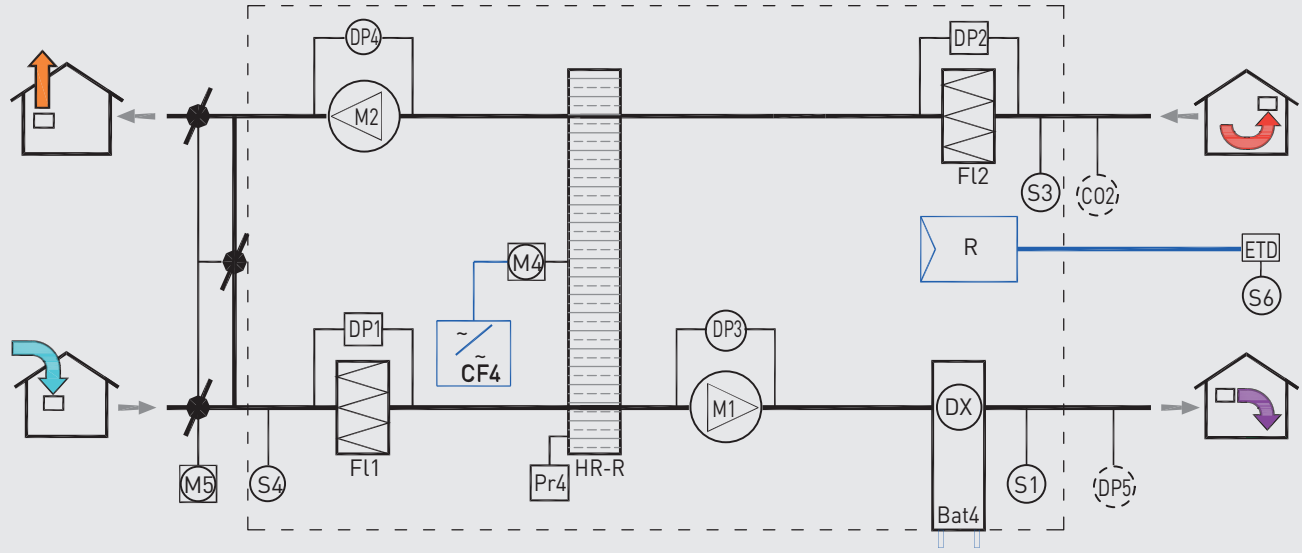

M1	Supply air fan motor
M2	Exhaust air fan motor
M4	Rotary exchanger motor
M5	Fresh air motorized damper (accessory)
M6	3 way valve actuator (accessory)
M7	3-way motorised valve (accessory)
S1	Supply air T° sensor
S3	Extract air T° sensor
S4	Outdoor T° sensor
S6	Room T° sensor
HR-R	Rotary wheel
Pr4	Tachometer (rotation control of the exchanger)
CF4	Frequency converter (enthalpic or adsorption exchanger)
Fi1	Outdoor air filters
Fi2	Extract air filter
DP1	Outdoor air filter pressure guard
DP2	Extract air filter pressure guard
DP3	Supply air fan pressure transmitter
DP4	Exhaust air fan pressure transmitter
DP5	Duct pressure transmitter (accessory)
Pr10	Antifrost sensor
Pr1/Pr2	Security thermostat (manu/auto)
S20	Thermostat change-over
Bat 1	Hot water coil
Bat 2	Electrical heating resistance
Bat 3	RHE DC/DF chilled water coil
Bat 4	DX direct expansion coil
R	Controler CORRIGO E28
ETD	Room touch screen display

SCO2	Air quality sensor (accessory)

DIMENSIONS (mm)

RHE VD 700 to 3500
Vertical discharge

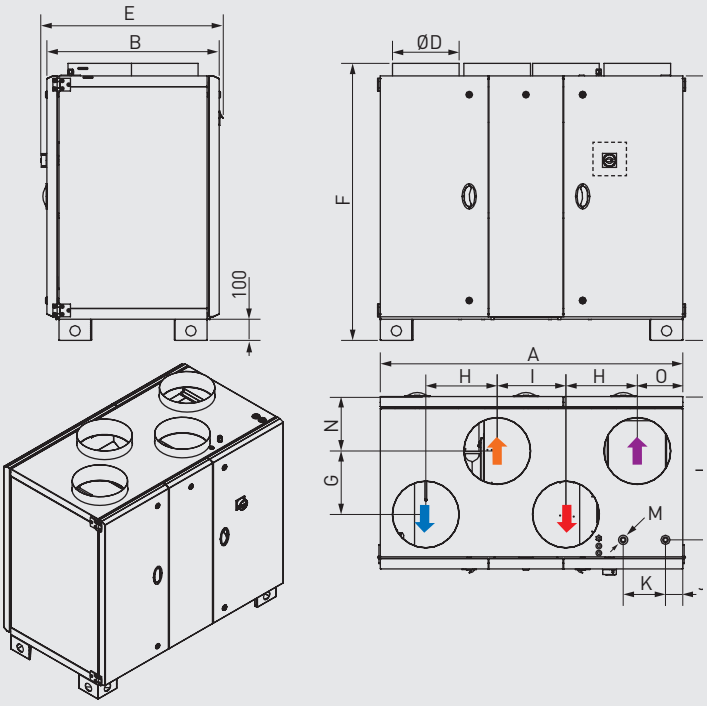

- Outdoor air duct connection
- Supply air duct connection
- Extract air duct connection
- Exhaust air duct connection
- Control position

Model	A	B	C	ØD	E	F	G	H	I	J	K	L	M	N	O	Weight (kg)
RHE 700/1300 VD	1285	715	1125	250	750	1185	200	310	300	101	195	569	1/2"	258	183	196
RHE 1900 VD	1490	815	1250	315	850	1309	300	355	350	90	255	689	1/2"	258	215	257
RHE 2500 VD	1740	965	1350	355	1000	1410	400	420	400	105	307	825	3/4"	283	250	328
RHE 3500 VD	1900	1125	1530	450	1156	1590	450	460	400	105	367	985	3/4"	338	290	395

RHE VD 4500
Horizontal discharge

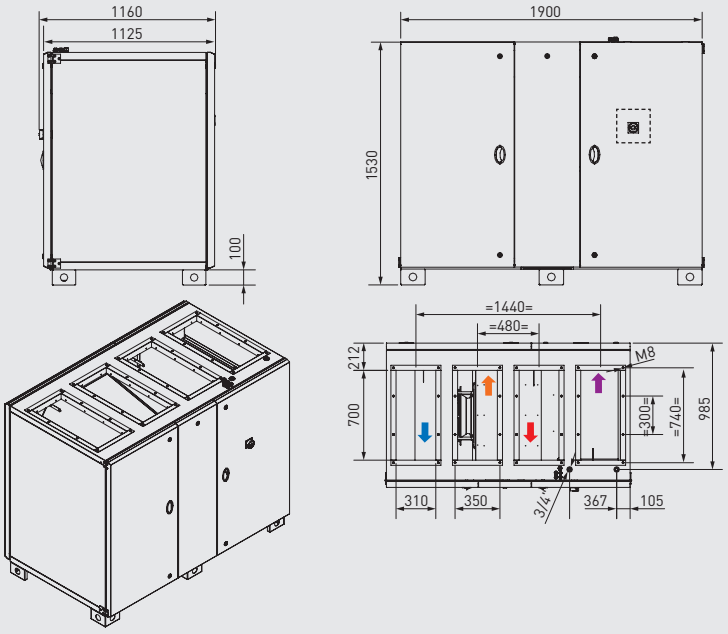

- Outdoor air duct connection
- Supply air duct connection
- Extract air duct connection
- Exhaust air duct connection
- Control position

DIMENSIONS (mm)

RHE HDR 700 to 4500
Horizontal discharge
Right side access.

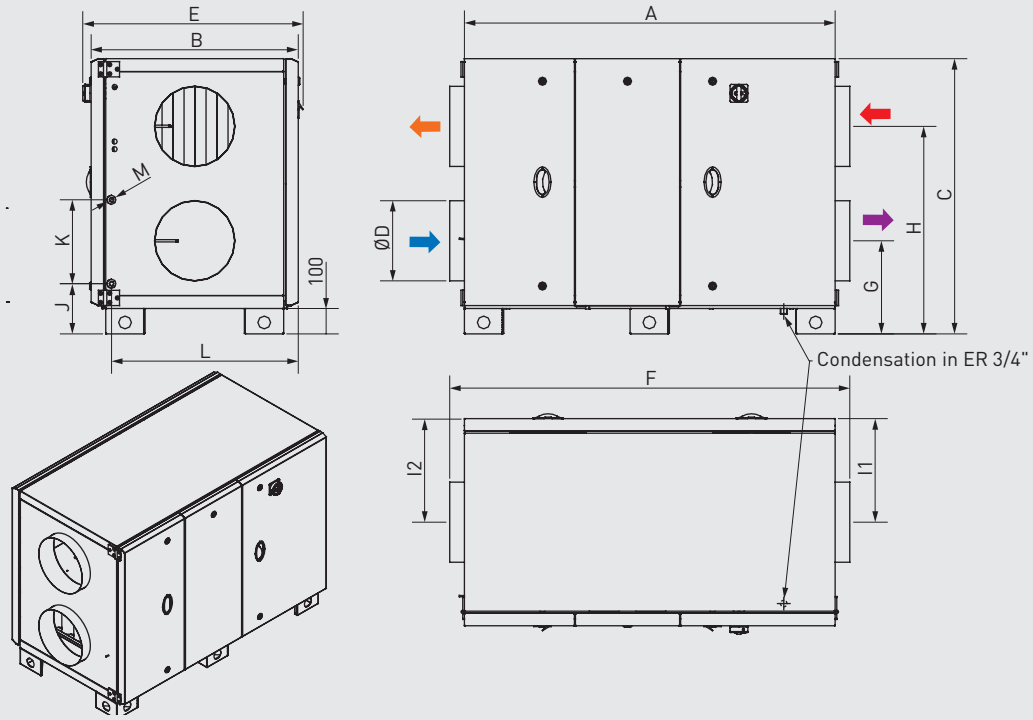

- Outdoor air duct connection
- Supply air duct connection
- Extract air duct connection
- Exhaust air duct connection
- Control position

RHE HDL 700 to 4500
Horizontal discharge
Left side access.

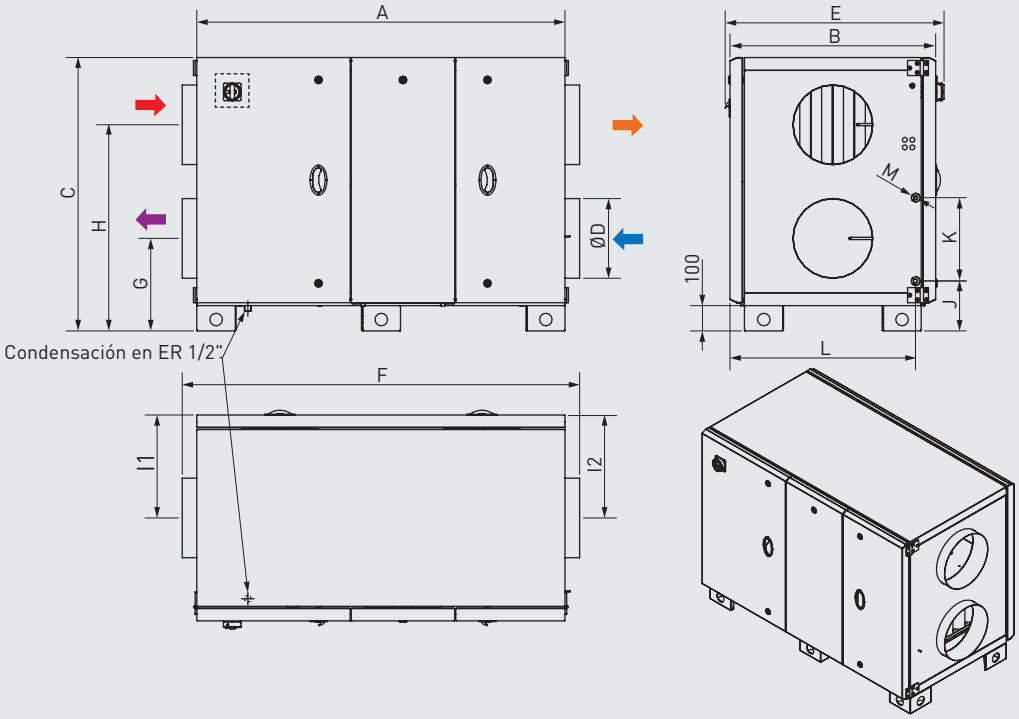

- Outdoor air duct connection
- Supply air duct connection
- Extract air duct connection
- Exhaust air duct connection
- Control position

Model	A	B	C	ØD	E	F	G	H	I1	I2	J	K	L	M	Weight (kg)
RHE 700/1300 HD	1309	715	983	315	763	1425	329	754	327,5	357,5	210	255	625	1/2"	173
RHE 1900 HD	1459	815	1085	355	851	1575	356	826	407,5	407,5	194	337	719	3/4"	217
RHE 2500 HD	1558	965	1183	400	1000	1675	379	904	482,5	482,5	204	367	869	3/4"	242
RHE 3500 HD	1558	1125	1363	450	1160	1675	436	1026	562,5	562,5	204	457	1030	3/4"	323
RHE 4500 HD	1558	1125	1363	500	1160	1675	436	1026	562,5	562,5	204	457	1030	3/4"	326

DIMENSIONES (mm)

RHE HDR 6000 to 10000
Horizontal discharge
Right side access.

These models are supplied with 2 modules, which are easily fit together in the moment of installation.

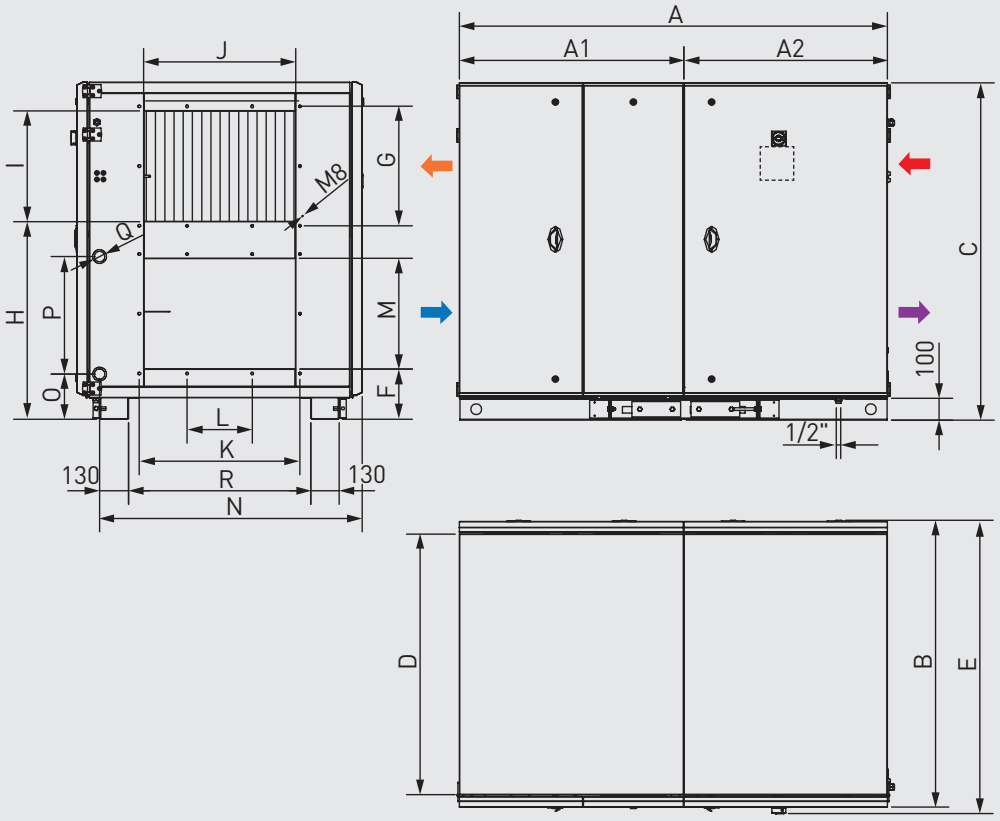

- Outdoor air duct connection
- Supply air duct connection
- Extract air duct connection
- Exhaust air duct connection
- Control position

RHE DX
with direct expansion coil

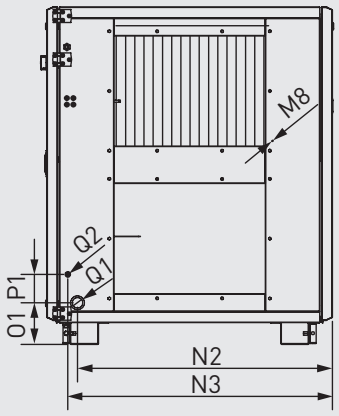

RHE DC/DF
with reversible hot/chilled water coil

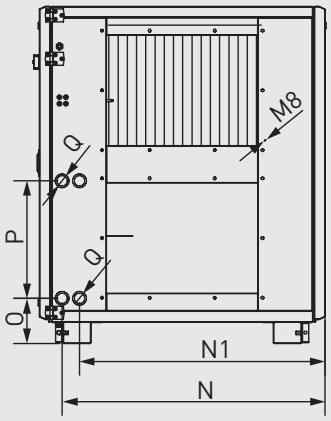

Model	A	A1*	A2	B	C	D	E	F	G	H	I	J	K
RHE 6000 HD	1972	1034	938	1315	1553	1200	1350	235	550	915	510	700	740
RHE 8000 HD	2112	1114	998	1565	1803	1450	1600	245	650	1050	610	900	940
RHE 10000 HD	2412	1263	1149	1735	1971	1620	1770	285	650	1175	610	1100	1140

* To take into account: 50mm of one module are fit into the other one.

Model	L	M	N	N1	N2	N3	O	O1	P	P1	Q	Q1	Q2	R
RHE 6000 HD	300	510	1210	1131	1174	1218	208	191	541	130	1"	12	28	840
RHE 8000 HD	300	610			1389	1438	216	179	653	206	1"1/4	22	28	1090
RHE 10000 HD	600	610	1614	1514	1559	1616	214	195	743	235	1"1/4	22	35	1260

* To take into account: 50mm of one module are fit into the other one.

Models	Weight (kg)																	
	Versions																	
	D			DI			DC			DFR			DC/DF			DX		
	A1	A2	A1 + A2	A1	A2	A1 + A2	A1	A2	A1 + A2	A1	A2	A1 + A2	A1	A2	A1 + A2	A1	A2	A1 + A2
RHE 6000 HD	345	224	569	345	251	596	345	245	590	345	252	597	345	273	618	345	262	607
RHE 8000 HD	457	285	742	457	322	779	457	313	770	457	323	780	457	352	809	457	337	794
RHE 10000 HD	550	354	904	550	398	948	550	388	938	550	400	950	550	434	984	550	416	966

DIMENSIONS (mm)

Outdoor version
Right side access.

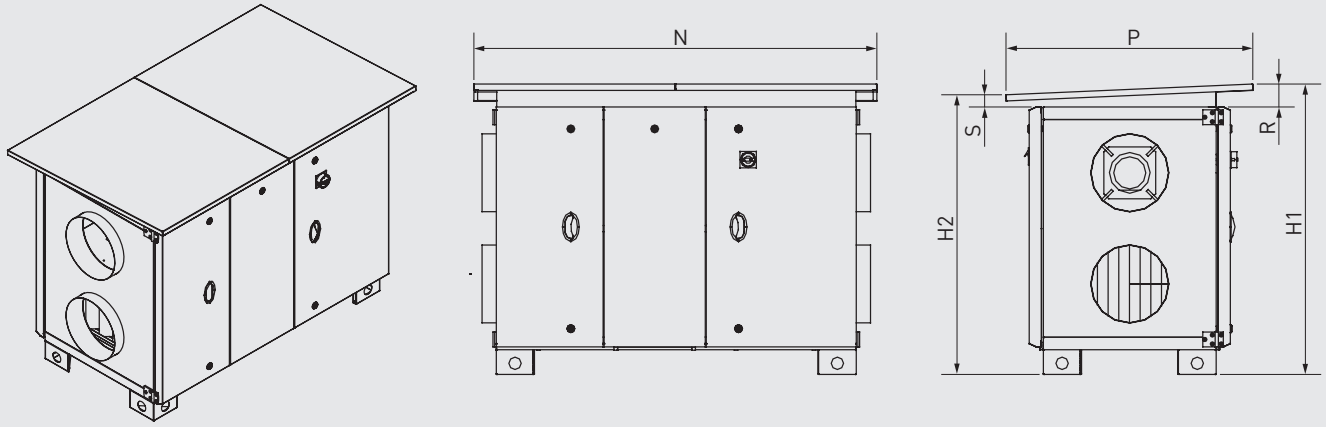

Control position

Outdoor version
Left side access.

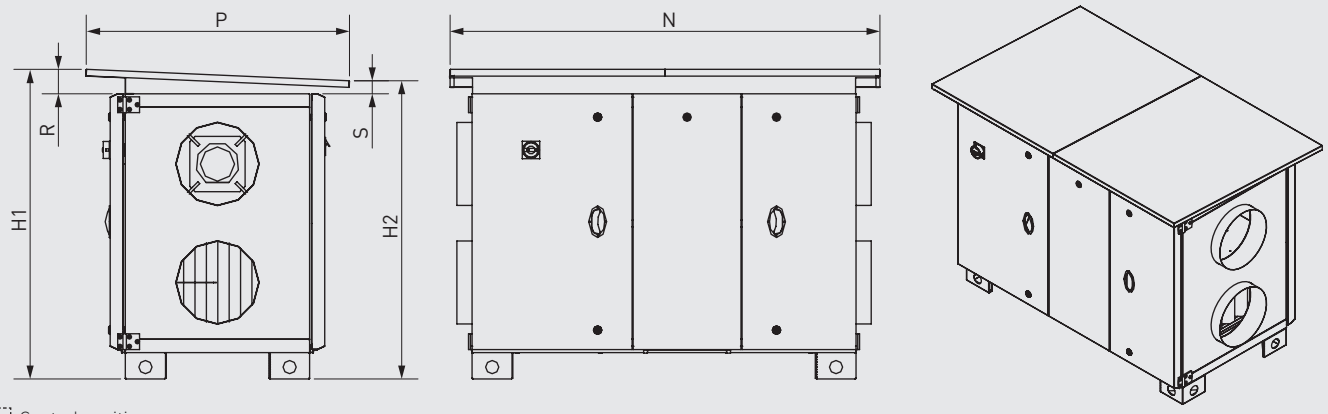

Control position

Model	H1	H2	N	P	R	S	Weight (Kg)
RHE 700/1300 HD OI	1068	1036	1568	900	85	54	192
RHE 1900 HD OI	1171	1136	1719	1000	89	54	239
RHE 2500 HD OI	1276	1236	1818	1150	94	54	268
RHE 3500/4500 HD OI	1462	1416	1818	1309	99	54	355
RHE 6000 HD OI	1659	1606	2232	1500	106	54	570
RHE 8000 HD OI	1917	1856	2372	1750	115	54	838
RHE 10000 HD OI	2093	2026	2672	1920	122	54	1034

ETD
Remote control with touch display

It is provided with 10m cable and equipped with RJ10 4P 4C connector to connect with the control (a cable until 100m length can be used, if necessary)

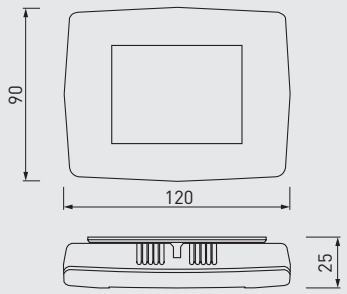

PERFORMANCE CURVE

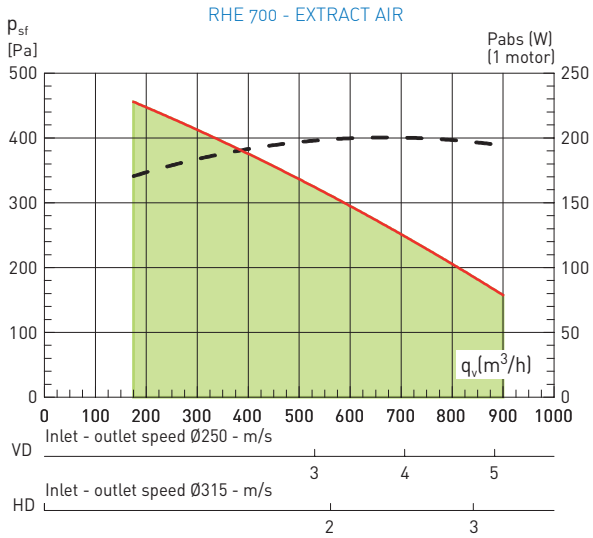

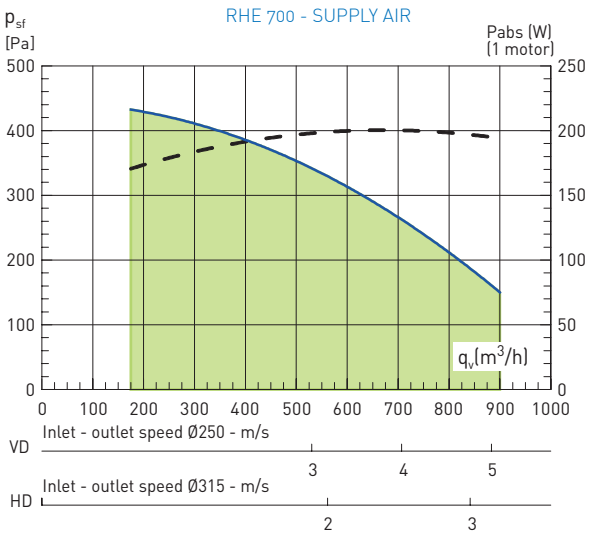

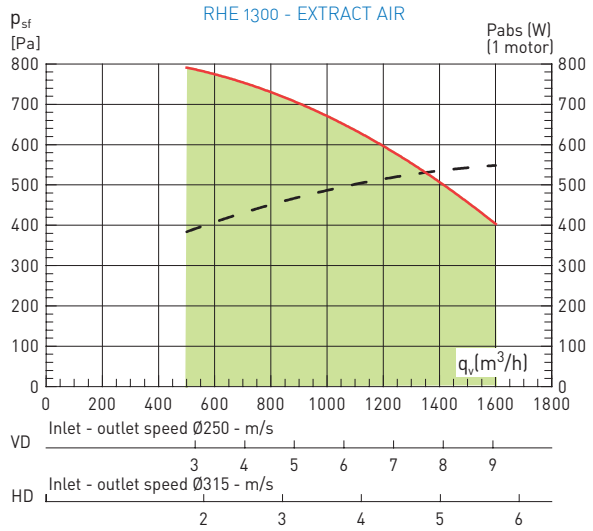

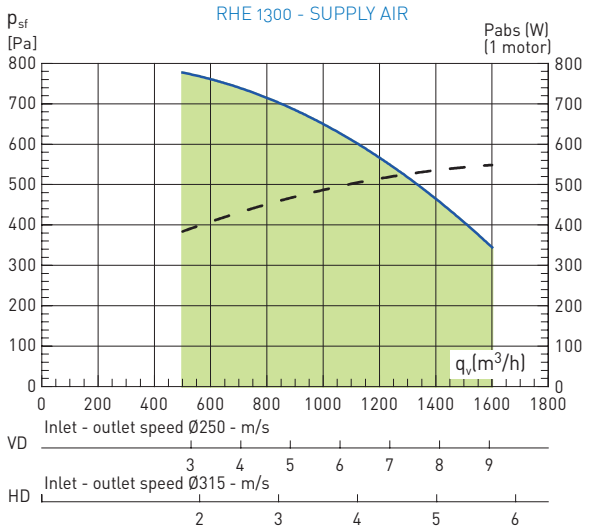

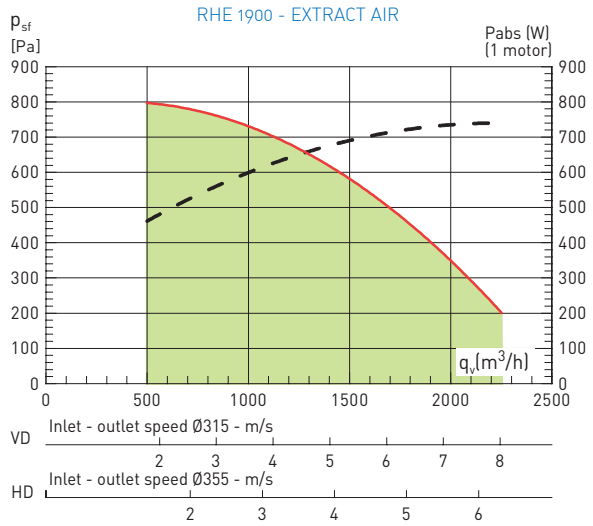

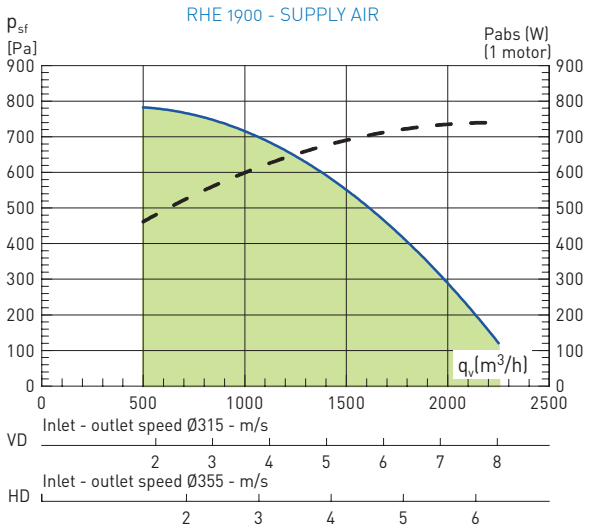

PERFORMANCE CURVE

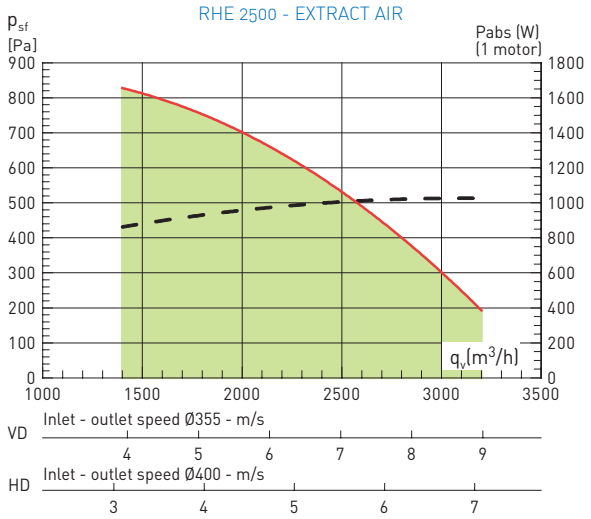

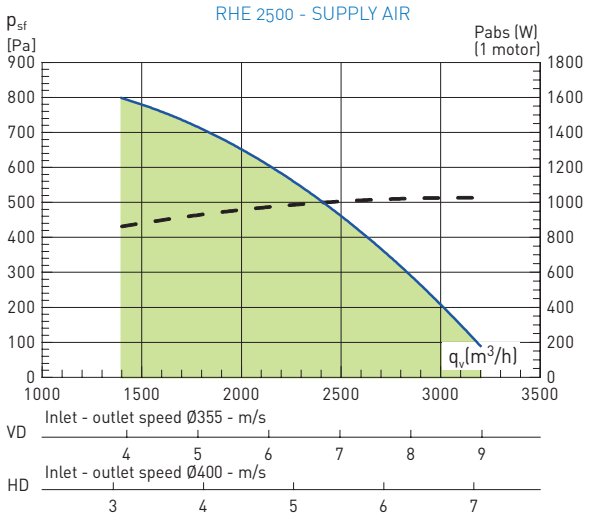

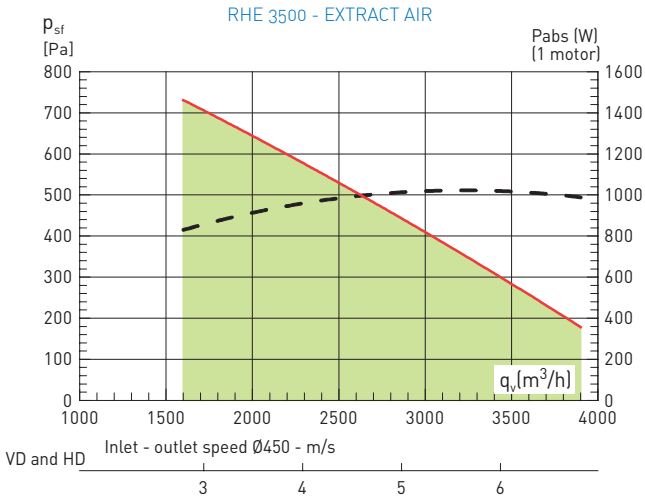

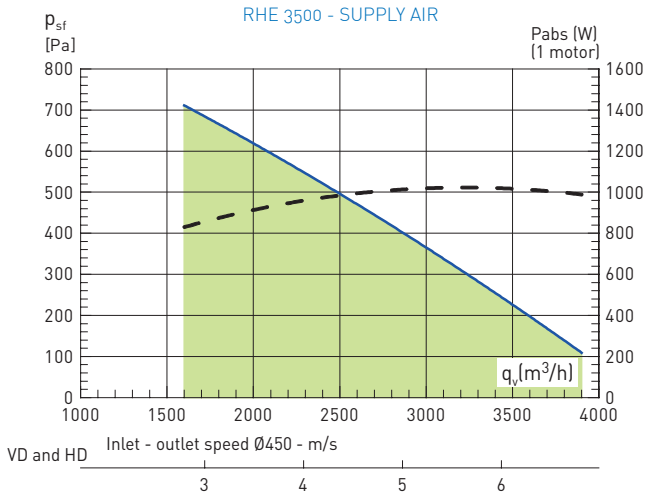

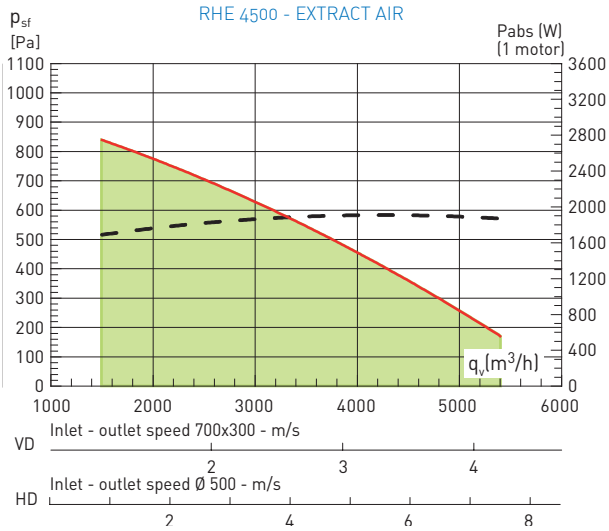

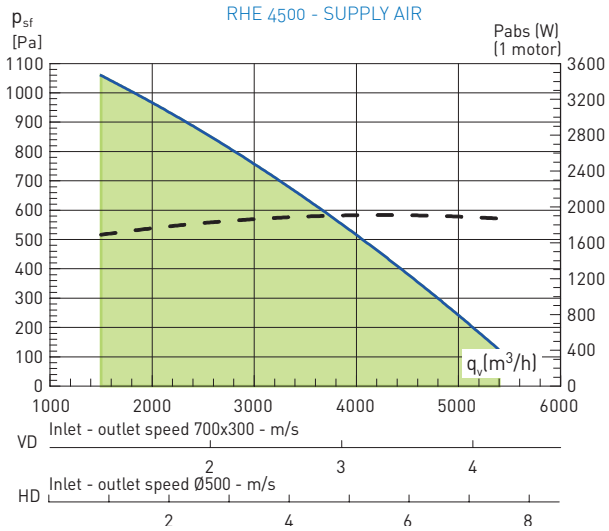

PERFORMANCE CURVE

RHE 6000 - EXTRACT AIR

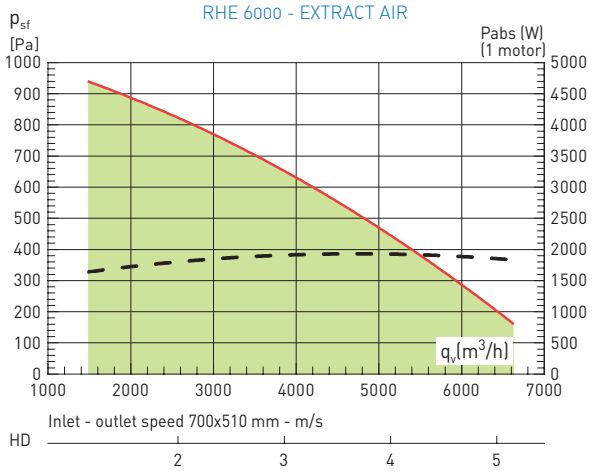

RHE 6000 - SUPPLY AIR

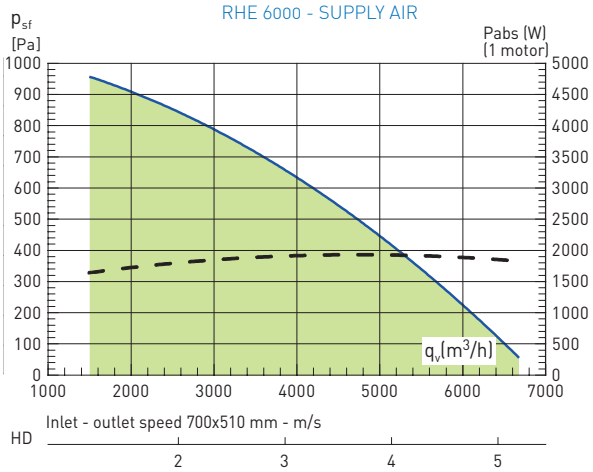

RHE 8000 - EXTRACT AIR

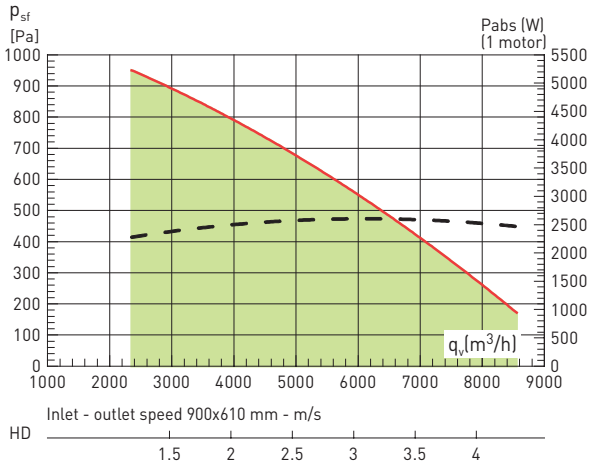

RHE 8000 - SUPPLY AIR

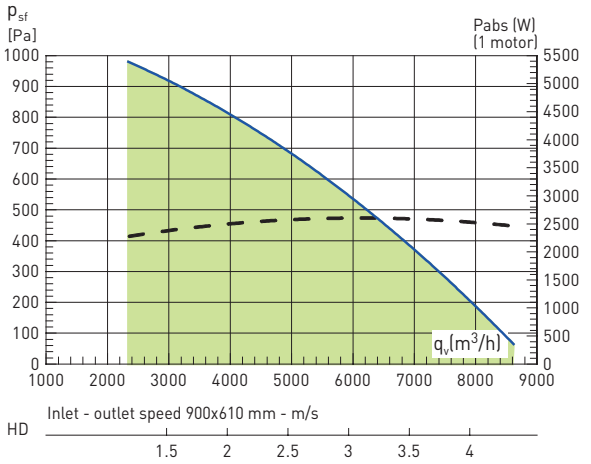

RHE 10000 - EXTRACT AIR

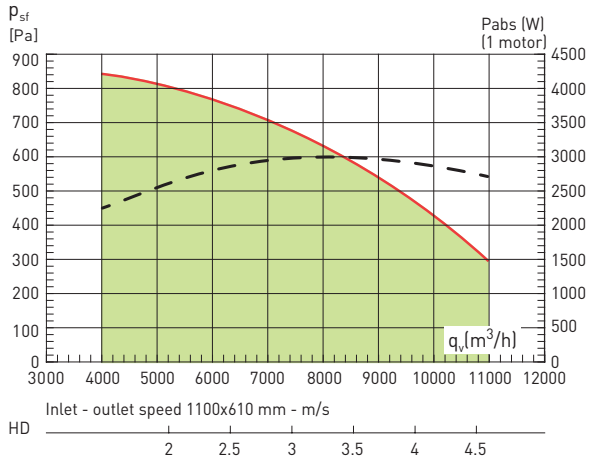

RHE 10000 - SUPPLY AIR

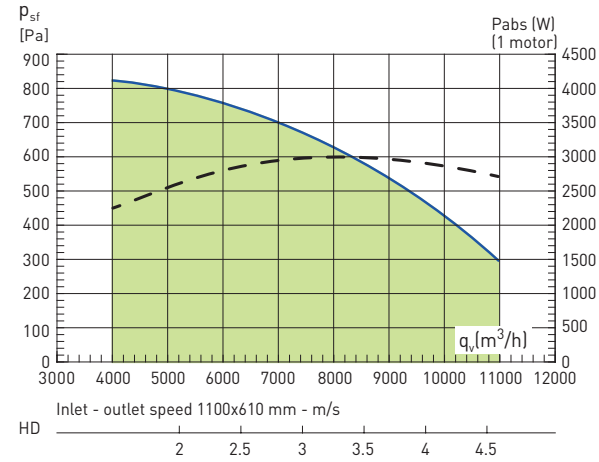

THERMAL CHARACTERISTICS

RHE 700

Airflow (m³/h)	WINTER Outdoor air -5°C HR 80% Extract air 20°C HR 50%				SUMMER Outdoor air 35°C HR 50% Extract air 25°C HR 45%			
	Temperature efficiency (sensible heat) (%)	T° supply air	% RH supply air	Sensible heat recovery (kW)	Temperature efficiency (sensible heat) (%)	T° supply air	% RH supply air	Sensible heat recovery (kW)
300	84	16	41	2,8	84	27	81	0,9
400	84	16	41	3,7	84	27	81	1,1
500	85	16	41	4,7	85	27	81	1,4
600	84	16	41	5,6	84	27	81	1,7
700	83	16	42	6,5	84	27	81	2

RHE 700 SO (SORPTION)

Airflow (m³/h)	WINTER Outdoor air -5°C HR 80% Extract air 20°C HR 50%				SUMMER Outdoor air 35°C HR 50% Extract air 25°C HR 45%			
	Temperature efficiency (sensible heat) (%)	T° supply air	% RH supply air	Sensible + latent heat recovery (kW)	Temperature efficiency (sensible heat) (%)	T° supply air	% RH supply air	Sensible + latent heat recovery (kW)
300	84	16	59	3,3	84	27	46	2,8
400	84	16	58	4,4	84	27	46	3,8
500	85	16	58	5,5	85	27	46	4,7
600	84	16	58	6,6	84	27	46	5,6
700	83	16	59	7,6	84	27	46	6,5

RHE 1300

Airflow (m³/h)	WINTER Outdoor air -5°C RH 80% Extract air 20°C RH 50%				SUMMER Outdoor air 35°C RH 50% Extract air 26°C RH 50%			
	Temperature efficiency (sensible heat) (%)	T° supply air	% RH supply air	Sensible heat recovery (kW)	Temperature efficiency (sensible heat) (%)	T° supply air	% RH supply air	Sensible heat recovery (kW)
500	85	16	41	4,7	85	27	81	1,4
700	83	16	42	6,5	84	27	81	2
900	81	15	44	8,2	81	27	79	2,5
1000	80	15	42	8,7	80	27	79	2,7
1100	78	14	44	9,5	78	27	78	2,9
1200	76	14	45	10,1	76	27	77	3,1
1300	74	14	46	10,8	74	28	76	3,3

RHE 1300 SO (SORPTION)

Airflow (m³/h)	WINTER Outdoor air -5°C RH 80% Extract air 20°C RH 50%				SUMMER Outdoor air 35°C RH 50% Extract air 25°C RH 45%			
	Temperature efficiency (sensible heat) (%)	T° supply air	% RH supply air	Sensible + latent heat recovery (kW)	Temperature efficiency (sensible heat) (%)	T° supply air	% RH supply air	Sensible + latent heat recovery (kW)
500	85	16	58	5,5	85	27	46	4,7
700	83	16	59	7,6	84	27	46	6,5
900	81	15	60	9,5	81	27	46	8,1
1000	80	15	61	10,4	80	27	47	8,9
1100	78	14	61	11,1	78	27	47	9,5
1200	76	14	62	11,9	76	27	47	10,2
1300	74	14	63	12,6	74	28	47	10,8

RHE 1900

Airflow (m³/h)	WINTER Outdoor air -5°C RH 80% Extract air 20°C RH 50%				SUMMER Outdoor air 35°C RH 50% Extract air 25°C RH 45%			
	Temperature efficiency (sensible heat) (%)	T° supply air	% RH supply air	Sensible heat recovery (kW)	Temperature efficiency (sensible heat) (%)	T° supply air	% RH supply air	Sensible heat recovery (kW)
500	84	16	42	4,7	84	27	81	1,4
750	84	16	41	7	84	27	81	2,2
1000	84	16	42	9,3	84	27	81	2,8
1250	82	15	43	11,4	82	27	80	3,5
1500	79	15	43	13	79	27	79	4
1750	76	14	45	14,8	76	27	77	4,5
1900	74	14	46	15,7	74	28	76	4,8

RHE 1900 SO (SORPTION)

Airflow (m³/h)	WINTER Outdoor air -5°C RH 80% Extract air 20°C RH 50%				SUMMER Outdoor air 35°C RH 50% Extract air 25°C RH 45%			
	Temperature efficiency (sensible heat) (%)	T° supply air	% RH supply air	Sensible + latent heat recovery (kW)	Temperature efficiency (sensible heat) (%)	T° supply air	% RH supply air	Sensible + latent heat recovery (kW)
500	84	16	58	5,5	84	27	46	4,7
750	84	16	58	8,2	84	27	46	7
1000	84	16	59	10,9	84	27	46	9,3
1250	82	15	60	13,3	82	27	46	11,4
1500	79	15	61	15,4	79	27	47	13,2
1750	76	14	62	17,3	76	27	47	14,8
1900	74	14	63	18,3	74	28	47	15,7

RHE 2500

Airflow (m³/h)	WINTER Outdoor air -5°C RH 80% Extract air 20°C RH 50%				SUMMER Outdoor air 35°C RH 50% Extract air 25°C RH 45%			
	Temperature efficiency (sensible heat) (%)	T° supply air	% RH supply air	Sensible heat recovery (kW)	Temperature efficiency (sensible heat) (%)	T° supply air	% RH supply air	Sensible heat recovery (kW)
1400	84	16	42	13	84	27	81	4
1600	83	16	42	14,8	83	27	80	4,5
1800	82	16	43	16,5	82	27	80	5
2000	81	15	44	18,1	81	27	79	5,5
2200	80	15	42	19,2	80	27	79	6
2400	78	15	43	20,7	78	27	78	6,4
2600	77	14	45	22	77	27	77	6,8

RHE 2500 SO (SORPTION)

Airflow (m³/h)	WINTER Outdoor air -5°C RH 80% Extract air 20°C RH 50%				SUMMER Outdoor air 35°C RH 50% Extract air 25°C RH 45%			
	Temperature efficiency (sensible heat) (%)	T° supply air	% RH supply air	Sensible + latent heat recovery (kW)	Temperature efficiency (sensible heat) (%)	T° supply air	% RH supply air	Sensible + latent heat recovery (kW)
1400	84	16	59	15,3	84	27	46	13,1
1600	83	16	59	17,3	83	27	46	14,8
1800	82	16	59	19,3	82	27	46	16,5
2000	81	15	60	21,1	81	27	46	18
2200	80	15	61	22,8	80	27	47	19,5
2400	78	15	61	24,4	78	27	47	20,9
2600	77	14	62	25,9	77	27	47	22,1

RHE 3500

Airflow (m³/h)	WINTER Outdoor air -5°C RH 80% Extract air 20°C RH 50%				SUMMER Outdoor air 35°C RH 50% Extract air 25°C RH 45%			
	Temperature efficiency (sensible heat) (%)	T° supply air	% RH supply air	Sensible heat recovery (kW)	Temperature efficiency (sensible heat) (%)	T° supply air	% RH supply air	Sensible heat recovery (kW)
1600	85	16	41	15	85	27	81	4,6
1900	84	16	42	17,7	84	27	81	5,4
2200	83	16	42	20,4	83	27	81	6,2
2500	82	16	43	23	82	27	80	7
2800	81	15	44	25,4	81	27	79	7,7
3100	80	15	42	27,1	80	27	79	8,4
3500	78	14	44	29,9	78	27	78	9,2

RHE 3500 SO (SORPTION)

Airflow (m³/h)	WINTER Outdoor air -5°C RH 80% Extract air 20°C RH 50%				SUMMER Outdoor air 35°C RH 50% Extract air 25°C RH 45%			
	Temperature efficiency (sensible heat) (%)	T° supply air	% RH supply air	Sensible + latent heat recovery (kW)	Temperature efficiency (sensible heat) (%)	T° supply air	% RH supply air	Sensible + latent heat recovery (kW)
1600	85	16	58	17,6	85	27	46	15
1900	84	16	58	20,8	84	27	46	17,8
2200	83	16	59	23,9	83	27	46	20,4
2500	82	16	59	26,8	82	27	46	22,9
2800	81	15	60	29,5	81	27	46	25,3
3100	80	15	61	32,1	80	27	47	27,5
3500	78	14	62	35,2	78	27	47	30,2

THERMAL CHARACTERISTICS

RHE 4500

Airflow (m³/h)	WINTER Outdoor air -5°C HR 80% Extract air 20°C HR 50%				SUMMER Outdoor air 35°C HR 50% Extract air 25°C HR 45%			
	Temperature efficiency (sensible heat) (%)	T° supply air	% RH supply air	Sensible heat recovery (kW)	Temperature efficiency (sensible heat) (%)	T° supply air	% RH supply air	Sensible heat recovery (kW)
2000	84	16	42	18,6	84	27	81	5,7
2500	82	16	43	23	82	27	80	7
3000	80	15	42	26,4	80	27	79	8,2
3500	78	14	44	29,9	78	27	78	9,2
4000	75	14	46	33,3	75	28	76	10,2
4500	72	13	45	35,4	72	28	75	11

RHE 4500 SO (SORPTION)

Airflow (m³/h)	WINTER Outdoor air -5°C HR 80% Extract air 20°C HR 50%				SUMMER Outdoor air 35°C HR 50% Extract air 25°C HR 45%			
	Temperature efficiency (sensible heat) (%)	T° supply air	% RH supply air	Sensible heat recovery (kW)	Temperature efficiency (sensible heat) (%)	T° supply air	% RH supply air	Sensible heat recovery (kW)
2000	84	16	58	21,9	84	27	46	18,7
2500	82	16	59	26,8	82	27	46	22,9
3000	80	15	60	31,3	80	27	47	26,7
3500	78	14	62	35,2	78	27	47	30,2
4000	75	14	63	38,8	75	28	47	33,2
4500	72	13	64	42	72	28	50	36

RHE 6000

Airflow (m³/h)	WINTER Outdoor air -5°C RH 80% Extract air 20°C RH 50%				SUMMER Outdoor air 35°C RH 50% Extract air 25°C RH 45%			
	Temperature efficiency (sensible heat) (%)	T° supply air	% RH supply air	Sensible heat recovery (kW)	Temperature efficiency (sensible heat) (%)	T° supply air	% RH supply air	Sensible heat recovery (kW)
2000	88	17	40	19,6	88	26	83	6
2750	87	17	41	26,7	87	26	82	8,2
3500	85	16	42	33,5	85	26	82	10,2
4250	83	16	41	38,8	83	27	80	12
5000	80	15	43	44,4	80	27	79	13,6
5500	78	14	45	47,8	78	27	78	14,5
6000	76	14	44	49,7	76	27	77	15,4

RHE 6000 SO (SORPTION)

Airflow (m³/h)	WINTER Outdoor air -5°C RH 80% Extract air 20°C RH 50%				SUMMER Outdoor air 35°C RH 50% Extract air 25°C RH 45%			
	Temperature efficiency (sensible heat) (%)	T° supply air	% RH supply air	Sensible + latent heat recovery (kW)	Temperature efficiency (sensible heat) (%)	T° supply air	% RH supply air	Sensible + latent heat recovery (kW)
2000	88	17	57	22,9	88	26	45	19,6
2750	87	17	57	31,3	87	26	46	26,7
3500	85	16	58	39	85	26	46	33,2
4250	83	16	59	45,9	83	27	46	39,1
5000	80	15	60	52	80	27	47	44,4
5500	78	14	61	55,6	78	27	47	47,5
6000	76	14	62	59	76	27	47	50,4

RHE 8000

Airflow (m³/h)	WINTER Outdoor air -5°C RH 80% Extract air 20°C RH 50%				SUMMER Outdoor air 35°C RH 50% Extract air 25°C RH 45%			
	Temperature efficiency (sensible heat) (%)	T° supply air	% RH supply air	Sensible heat recovery (kW)	Temperature efficiency (sensible heat) (%)	T° supply air	% RH supply air	Sensible heat recovery (kW)
2500	88	17	40	24,4	88	26	83	7,5
3000	88	17	40	29,3	88	26	83	9
4000	87	17	41	38,9	87	26	82	11,9
5000	86	16	42	47,9	86	26	82	14,6
6000	83	16	43	56,3	83	27	80	17
7000	81	15	43	62,5	81	27	79	19,2
8000	78	14	45	69,5	78	27	78	21,1

RHE 8000 SO (SORPTION)

Airflow (m³/h)	WINTER Outdoor air -5°C RH 80% Extract air 20°C RH 50%				SUMMER Outdoor air 35°C RH 50% Extract air 25°C RH 45%			
	Temperature efficiency (sensible heat) (%)	T° supply air	% RH supply air	Sensible + latent heat recovery (kW)	Temperature efficiency (sensible heat) (%)	T° supply air	% RH supply air	Sensible + latent heat recovery (kW)
2500	88	17	57	28,6	88	26	45	24,4
3000	88	17	57	34,4	88	26	45	29,3
4000	87	17	57	45,6	87	26	46	38,8
5000	86	16	58	55,7	86	26	46	48
6000	83	16	59	65,1	83	27	46	55,5
7000	81	15	60	73,4	81	27	47	62,7
8000	78	14	61	80,8	78	27	47	69

RHE 10000

Airflow (m³/h)	WINTER Outdoor air -5°C RH 80% Extract air 20°C RH 50%				SUMMER Outdoor air 35°C RH 50% Extract air 25°C RH 45%			
	Temperature efficiency (sensible heat) (%)	T° supply air	% RH supply air	Sensible heat recovery (kW)	Temperature efficiency (sensible heat) (%)	T° supply air	% RH supply air	Sensible heat recovery (kW)
4000	88	17	40	39,1	88	26	83	12
5000	87	17	41	48,6	87	26	82	14,8
6000	86	17	41	57,7	86	26	82	17,6
7000	85	16	43	66,4	85	27	81	20,1
8000	83	16	42	72,8	83	27	80	22,4
9000	80	15	43	80,2	80	27	79	24,6
10000	78	15	45	87,1	78	27	78	26,5

RHE 10000 SO (SORPTION)

Airflow (m³/h)	WINTER Outdoor air -5°C RH 80% Extract air 20°C RH 50%				SUMMER Outdoor air 35°C RH 50% Extract air 25°C RH 45%			
	Temperature efficiency (sensible heat) (%)	T° supply air	% RH supply air	Sensible + latent heat recovery (kW)	Temperature efficiency (sensible heat) (%)	T° supply air	% RH supply air	Sensible + latent heat recovery (kW)
4000	88	17	57	45,8	88	26	45	39
5000	87	17	57	56,9	87	26	46	48,5
6000	86	17	58	67,3	86	26	46	57,4
7000	85	16	58	77	85	27	46	65,7
8000	83	16	59	85,9	83	27	46	73,4
9000	80	15	60	94,1	80	27	47	80,3
10000	78	15	61	101,5	78	27	47	86,7

MIXING MODULE MIB (ACCESSORY)

The casing is made of 50 mm, self-supporting double skinned panels (mineral wool, 40 kg/m³, thermal conductivity 0.037 W/ mK). The outer skin is made from coated steel (RAL7024) with a high resistance against corrosion (class:RC3) and UV light (class: RUV3) according to EN 10169 and the inner skin is made from galvanised steel.
Easy access to all components via large hinged front doors. Circular connection flanges with EPDM rubber seal strip, VELODUCT© tightness class D up to size 3500 HD, rectangular connections for the sizes 4500 VD, 6000, 8000 and 10000.

MIB ON-OFF

Operation with time-controlled operation (program channel 5 on the CORRIGO control):
On-off actuator, type CM24, 2 Nm until size 4.500 and LM24A for sizes 6.000, 8.000 and 10.000.
Spring return actuator LF24 S 4Nm, on/off.

MIB 0-10V

Automatic mixing of fresh air and recirculated air, depending on the indoor air quality (CO2).
Actuator CM24-SR-L 2Nm until size 4.500 or LF24SR for models 6000, 8000 and 10000.
Spring return actuator LF24 SR 4Nm, proportional.
CO2 Probe (G MIX 400-1100ppm SCO2 0-10 V).


Mixing module


RHE Unit


Mixing module installed with RHE unit


Easy access

Dimensions 07 to 45

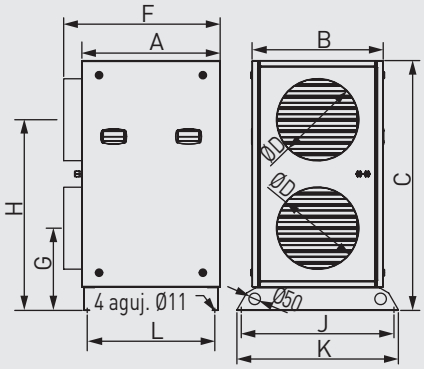

Model	A	B	C	D	F	G	H	J	K	L
MIB 700/1300	550	470	982,5	315	630	330	754	562	600	503
MIB 1900	600	581	1082,5	355	678	356	826	662	700	553
MIB 2500	650	700	1182,5	400	700	380	904	812	850	603
MIB 3500	750	860	1362,5	450	830	426	1036	972	1010	703
MIB 4500	750	860	1362,5	500	830	426	1036	972	1010	703

Dimensions 60 to 100

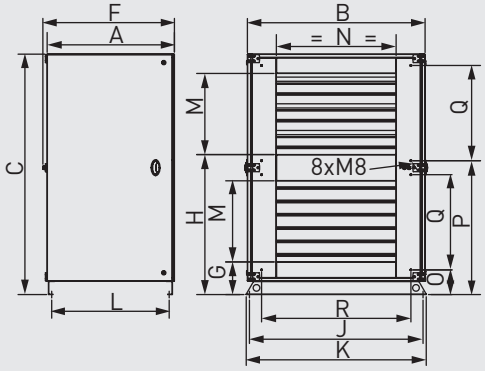

Model	A	B	C	F	G	H	J
MIB 6000	850	1082,5	1552,5	878,5	220	925	1052
MIB 8000	954,5	1332,5	1802,5	981,5	245	1050	1302
MIB 10000	950	1502,5	1972,5	981,5	287,5	1177,5	1472

Model	K	L	M	N	O	P	Q	R
MIB 6000	1100	781	510	700	185	899	569	870
MIB 8000	1350	881	610	900	185	1004	714	1120
MIB 10000	1520	881	610	1100	185	1175	714	1290

ACCESSORIES

Model	Connection (mm)	Flexible connection	Rectangular flange	Rectangular-circular reduction	Rain cap	Antibration feet (1 pack = 4 uds.)[1]	KIT adjustable feet (1 kit = 4 ó 6 uds.)[2]	Anti-freeze damper[3]
RHE 700 VD	Ø250	ACOPEL F400-250/160 N	–	–	–	PAVZ 80 SH 60	KIT 4 AF	REEV 250
RHE 1300 VD	Ø250	ACOPEL F400-250/160 N	–	–	–	PAVZ 80 SH 60	KIT 4 AF	REEV 250
RHE 1900 VD	Ø315	ACOPEL F400-315/160 N	–	–	–	PAVZ 80 SH 60	KIT 4 AF	REEV 315
RHE 2500 VD	Ø355	ACOPEL F400-355/160 N	–	–	–	PAVZ 100 SH 75	KIT 6 AF	REEV 355
RHE 3500 VD	Ø450	ACOPEL F400-450/160 N	–	–	–	PAVZ 100 SH 75	KIT 6 AF	REEV 450
RHE 4500 VD	⧄ 700x310	ACOPEL RECT 4500	BRL 700x310	–	–	PAVZ 100 SH 75	KIT 6 AF	MLD 4500 T
RHE 700 HD	Ø315	ACOPEL F400-315/160 N	–	–	APC-315	PAVZ 80 SH 60	KIT 4 AF	REEV 315
RHE 1300 HD	Ø315	ACOPEL F400-315/160 N	–	–	APC-315	PAVZ 80 SH 60	KIT 4 AF	REEV 315
RHE 1900 HD	Ø355	ACOPEL F400-355/160 N	–	–	APC-355	PAVZ 80 SH 60	KIT 4 AF	REEV 355
RHE 2500 HD	Ø400	ACOPEL F400-400/160 N	–	–	APC-400	PAVZ 80 SH 60	KIT 6 AF	REEV 400
RHE 3500 HD	Ø450	ACOPEL F400-450/160 N	–	–	APC-450	PAVZ 100 SH 75	KIT 6 AF	REEV 450
RHE 4500 HD	Ø500	ACOPEL F400-500/160 N	–	–	APC-500	PAVZ 100 SH 75	KIT 6 AF	REEV 500
RHE 6000 HD	⧄ 700x510	ACOPEL RECT 6000	BRL 700x510	PRRE 700x510/630	APPR-6000 APPA-6000	PAVZ 100 SH 75	KIT 4 AF	MLD 6000 T
RHE 8000 HD	⧄ 900x610	ACOPEL RECT 8000	BRL 900x610	PRRE 900x610/800	APPR-8000 APPA-8000	PAVZ 100 SH 75	KIT 4 AF	MLD 8000 T
RHE 10000 HD	⧄1100x610	ACOPEL RECT 10000	BRL 1100x610	PRRE 1100x610/900	APPR-10000 APPA-10000	PAVZ 100 SH 75	KIT 4 AF	MLD 10000 T

[1] RHE 3500,4500, 6000, 8000 and 10000models is necessary to use 2 packs PAVZ 100 SH 75.
[2] RHE 6000, 8000 and 10000 models is necessary to use 2 kits 4 AF.
[3] To obtain a motorized damper must be mounted a servomotor LF-230S, LF 24 S (electrical accessories).

ACCESSORIES-FILTERS

Type of filters provided with the product

	Prefilter		Filter	
	G4	M5	F7	F9
Inlet	–	✔	–	–
Outlet	✔	*	✔	*

*Available as a replacement alternative.

Model	Filters				Quantity to order
	AFR RHE G4	AFR RHE M5	AFR RHE F7	AFR RHE F9	
RHE 700	AFR RHE 700/1300 G4	AFR RHE 700/1300 M5	AFR RHE700/1300 F7	AFR RHE 700/1300 F9	1
RHE 1300	AFR RHE 700/1300 G4	AFR RHE 700/1300 M5	AFR RHE700/1300 F7	AFR RHE 700/1300 F9	1
RHE 1900	AFR RHE 1900 G4	AFR RHE 1900 M5	AFR RHE 1900 F7	AFR RHE 1900 F9	1
RHE 2500	AFR RHE 2500 G4	AFR RHE 2500 M5	AFR RHE 2500 F7	AFR RHE 2500 F9	2
RHE 3500	AFR RHE 3500/4500 G4	AFR RHE 3500/4500 M5	AFR RHE 3500/4500 F7	AFR RHE 3500/4500 F9	2
RHE 4500	AFR RHE 3500/4500 G4	AFR RHE 3500/4500 M5	AFR RHE 3500/4500 F7	AFR RHE 3500/4500 F9	2
RHE 6000	AFR RHE 6000 G4	AFR RHE 6000 M5	AFR RHE 6000 F7	AFR RHE 6000 F9	2
RHE 8000	AFR RHE 8000 G4	AFR RHE 8000 M5	AFR RHE 8000 F7	AFR RHE 8000 F9	3
RHE 10000	AFR RHE 10000 G4	AFR RHE 10000 M5	AFR RHE 10000 F7	AFR RHE 10000 F9	4

ACCESSORIES

MLD
Anti-freeze damper.

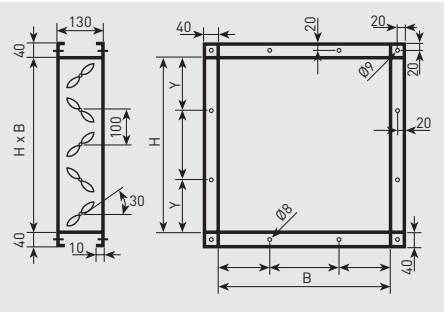

Model	B	H
MLD 4500 T	700	310
MLD 6000 T	700	510
MLD 8000 T	900	610
MLD 10000 T	1100	610

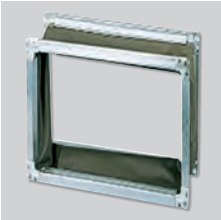

ACOPEL RECT
Rectangular elastic coupling.

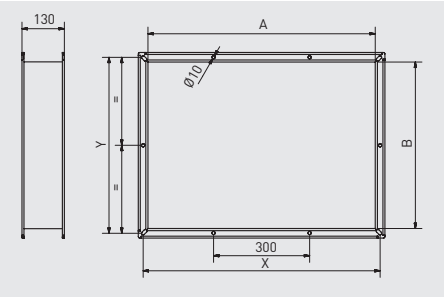

Model	A	B	X	Y
ACOPEL RECT 4500	710	320	740	350
ACOPEL RECT 6000	710	520	740	550
ACOPEL RECT 8000	910	620	940	650
ACOPEL RECT 10000	1110	620	1140	650

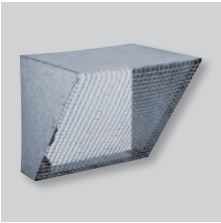

APPR/APPA
Protection guard for exhaust air / inlet outdoor air.

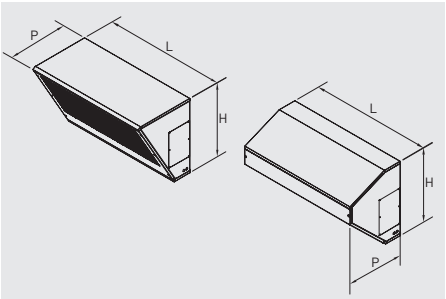

Model	Description	H	L	P
APPR 6000	Exhaust air	647	1062	506
APPR 8000	Inlet outdoor air	747	1262	564
APPR 10000	Inlet outdoor air	747	1465	564
APPA 6000	Exhaust air	647	1062	506
APPA 8000	Inlet outdoor air	747	1262	564
APPA 10000	Inlet outdoor air	747	1465	564

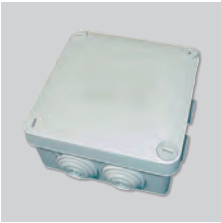

SPRD B
Pressure sensor. Specialy adapted for the range RHE when constant pressure (COP) conrol is required.

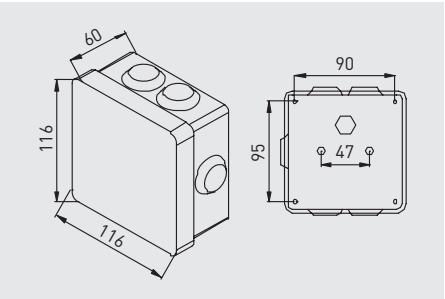

Model	Electrical supply	Maximum power (W)	Output	IP Protection	Pressure range
SPRD B	12-24Vdc	8mA	0,5-4,5Vdc	Box IP54	0 - 800Pa

SCO2-A 0/10 V
Ambient CO_2 and temperature sensor.

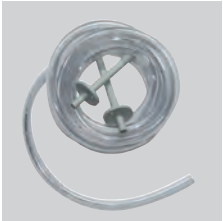

KTPR
Kit of 2 pressure taps + screws + 2 m Translucid tube.

SCO2-G 0/10 V
CO_2 sensor for the duct.

SHT-G 0/10 V
Temperature and relative humidity sensor for the duct.

LF 230 S
(AC 230V, 50/60Hz)

LF 24 S
(AC 24V 50/60Hz/ DC 24V)
Actuator with spring return motor. 4 Nm. Control signal On/Off.

3-WAY VALVES WITH PROPORTIONAL ACTUATOR
Three way motorised control valve.

FBL-N

Filtration box, provided without filter, to mount AFR-N (2 as a maximum).
Suitable to mount outdoors.
Manufactured in galvanized steel.
Circular flanges with tightness joint.
Cover easily removable to quickly replace the filter.

Model	W	H	L	Ø (mm)	Weight (kg)
FBL-N-200	260	310	290	200	5
FBL-N-250	360	310	390	250	8
FBL-N-315	460	450	490	315	10
FBL-N-355/18	510	450	540	355	12
FBL-N-355/23	560	480	590	355	17
FBL-N-400	660	480	690	400	25
FBL-N-450	740	550	770	450	27
FBL-N-500	940	600	970	500	45
FBL-N-630	1010	770	1040	630	48

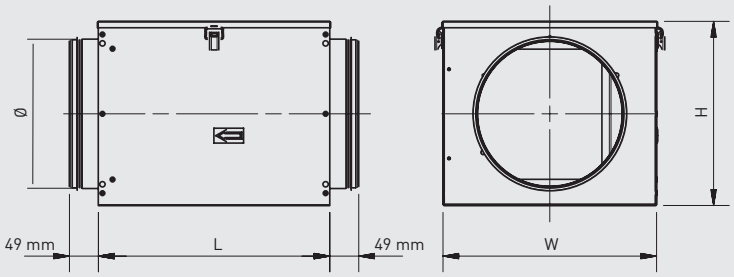

AFR-N
Filters to mount in filtration boxes FLB-N

Filter box	Filters*			
FBL-N	AFR-N G4	AFR-N M5	AFR-N F7	AFR-N F9
FBL-N-200	AFR-N-200/05 G4	AFR-N-200/05 M5	AFR-N-200/05 F7	AFR-N-200/05 F9
FBL-N-250	AFR-N-250/08 G4	AFR-N-250/08 M5	AFR-N-250/08 F7	AFR-N-250/08 F9
FBL-N-315	AFR-N-315/12 G4	AFR-N-315/12 M5	AFR-N-315/12 F7	AFR-N-315/12 F9
FBL-N-355/18	AFR-N-355/18 G4	AFR-N-355/18 M5	AFR-N-355/18 F7	AFR-N-355/18 F9
FBL-N-355/23	AFR-N-355/23 G4	AFR-N-355/23 M5	AFR-N-355/23 F7	AFR-N-355/23 F9
FBL-N-400	AFR-N-400/30 G4	AFR-N-400/30 M5	AFR-N-400/30 F7	AFR-N-400/30 F9
FBL-N-450	AFR-N-450/45 G4	AFR-N-450/45 M5	AFR-N-450/45 F7	AFR-N-450/45 F9
FBL-N-500	AFR-N-500/55 G4	AFR-N-500/55 M5	AFR-N-500/55 F7	AFR-N-500/55 F9
FBL-N-630	AFR-N-630/80 G4	AFR-N-630/80 M5	AFR-N-630/80 F7	AFR-N-630/80 F9

* Maximum working temperature: 70ºC. Maximum pressure lost: 250Pa.

Pressure drop (FBL-N)

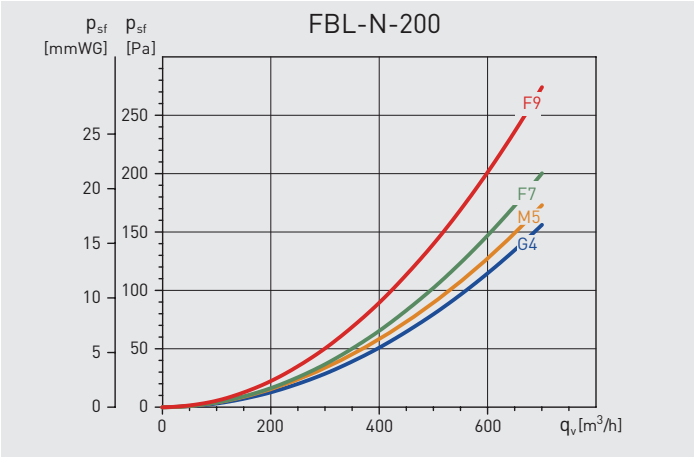

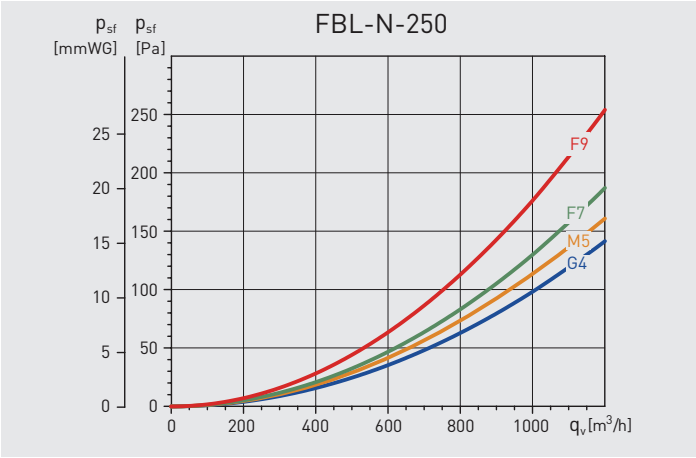

Pressure drop (FBL-N)

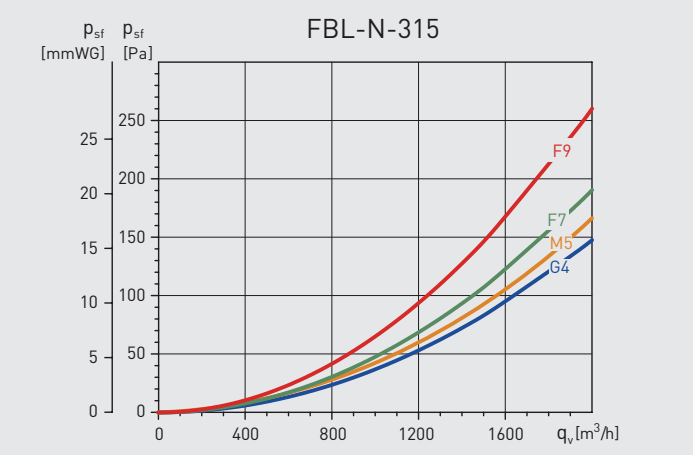

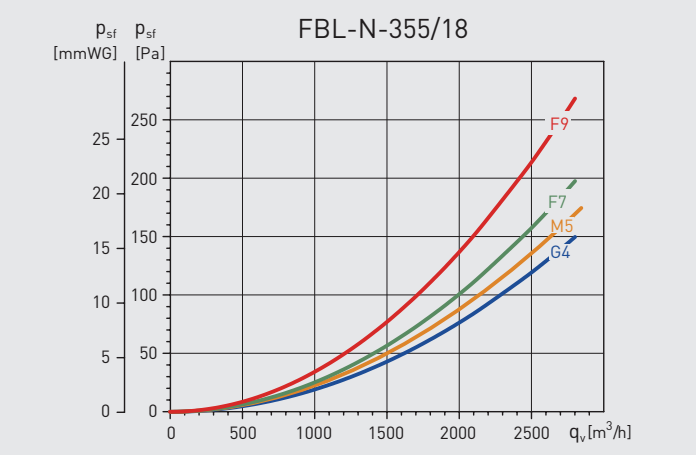

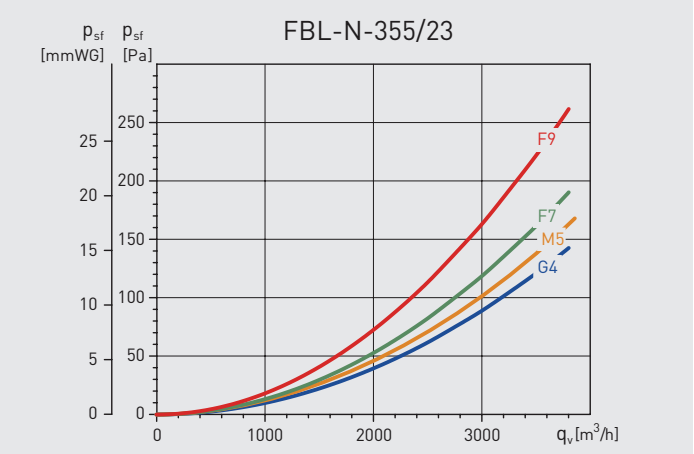

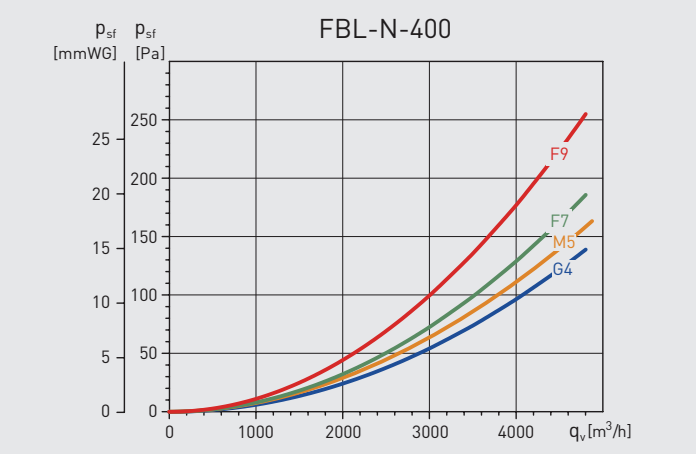

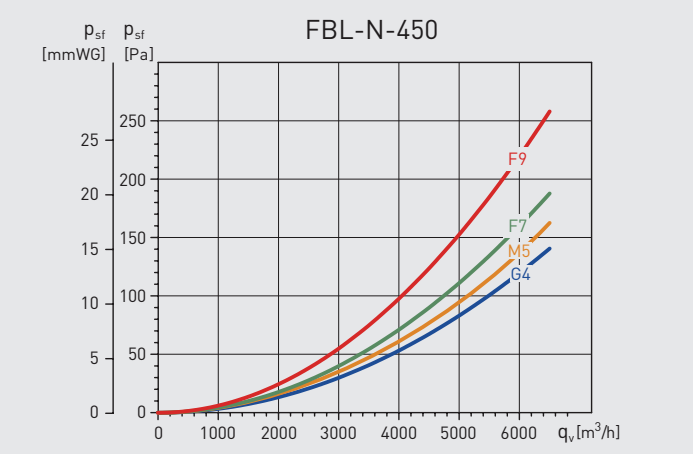

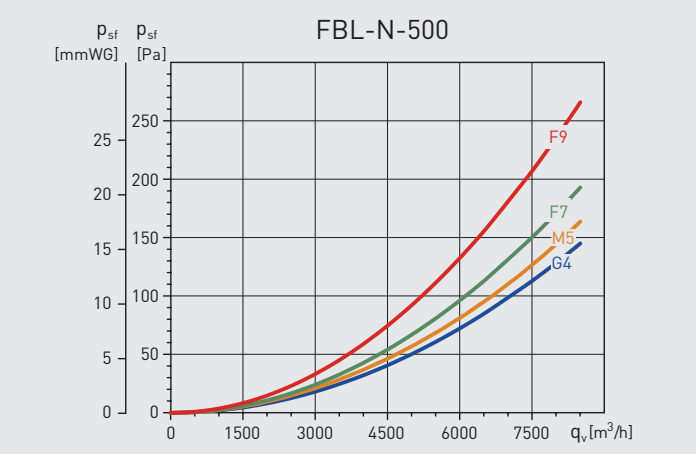

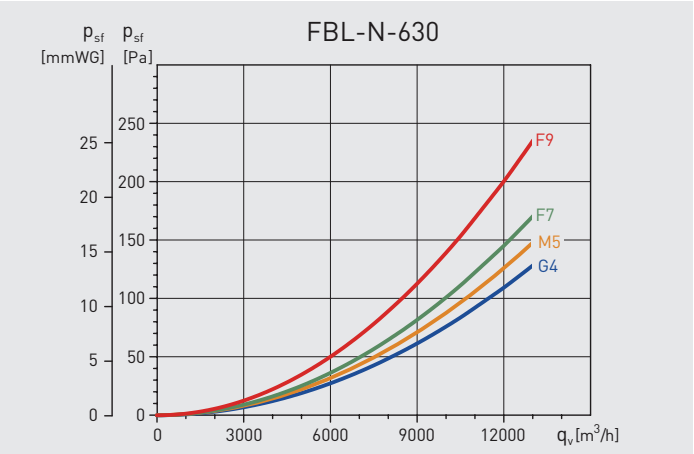

ACOPEL F400 N

Circular flexible connector.
Certified F400-120.

Model	Ø A	B
ACOPEL F400-120/160 N	115	160
ACOPEL F400-140/160 N	128	160
ACOPEL F400-160/160 N	163	160
ACOPEL F400-180/160 N	190	160
ACOPEL F400-200/160 N	203	160
ACOPEL F400-225/160 N	227	160
ACOPEL F400-250/160 N	260	160
ACOPEL F400-280/160 N	283	160
ACOPEL F400-315/160 N	323	160
ACOPEL F400-355/160 N	365	160
ACOPEL F400-400/160 N	410	160
ACOPEL F400-450/160 N	458	160
ACOPEL F400-500/160 N	510	160
ACOPEL F400-560/160 N	568	160
ACOPEL F400-630/160 N	640	160
ACOPEL F400-710/180 N	721	180
ACOPEL F400-800/180 N	809	180
ACOPEL F400-900/180 N	909	180
ACOPEL F400-1000/180 N	1010	180
ACOPEL F400-1120/200 N	1130	200
ACOPEL F400-1250/200 N	1260	200
ACOPEL F400-1400/200N	1410	200
ACOPEL F400-1600/200 N	1610	200

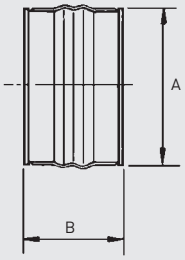

SIL

Sound attenuator to reduce noise transmission to ducting system.
In galvanized steel.
On request: stainless steel version.

Model	ØA (mm)	ØB (mm)	C (mm)	D (mm)	Weight (kg)	Attenuation in dB							
						63	125	250	500	1000	2000	4000	8000
SIL 125	125	225	600	700	5,08	1	3	9	20	28	35	28	13
SIL 160	160	260	600	700	6,53	1	3	7	17	23	29	20	9
SIL 200	200	300	600	700	8,63	1	3	7	14	20	26	15	7
SIL 250	250	355	600	700	12,9	0	2	7	12	18	23	10	5
SIL 315	315	415	600	700	14,5	0	2	7	10	15	20	7	4
SIL 355	355	450	700	860	16,9	3,7	4,1	6,7	13,2	14,3	3,4	8,1	7
SIL 400	400	500	700	860	16,9	1,8	3,1	4	9,5	13,7	5,6	0,4	5,9
SIL 450	450	560	900	1050	22,4	2	6	8	14	16	13	13	4
SIL 500	500	630	900	1050	26,4	2,2	2,8	4,6	10,1	7,7	5,1	1,8	1,6
SIL 560	560	630	900	1050	26,5	2	4	7	12	12	12	10	2
SIL 630	630	710	900	1100	30,4	1	7	7	12	12	12	10	1

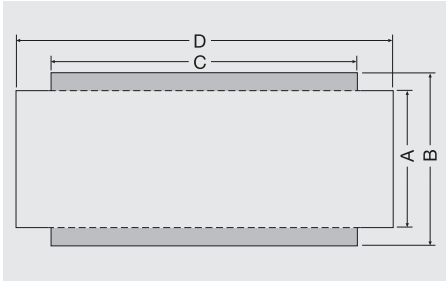

APC

Protection guards for direct connection to the inlet-outlet fan flange connector.

Model	ØA	B
APC-80	80	216
APC-100	100	228
APC-125	125	232
APC-160	160	252
APC-200	200	275
APC-250	250	304
APC-315	315	342
APC-355	355	365
APC-400	400	391
APC-450	450	420
APC-500	500	449
APC-560	560	483
APC-630	630	524
APC-710	710	570
APC-800	800	622

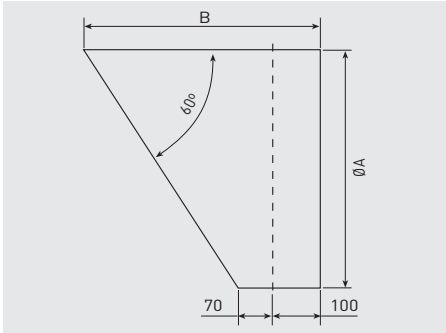

KSE

Rubber anti-vibration mounts that absorb vibration and attenuate the noise produced in the installation.
(1 KSE = 4 supports in a bag)

Model	Weight of fan	A	C
KSE-45	40 – 180 kg	24	M8
KSE-70	80 – 280 kg	38	M8

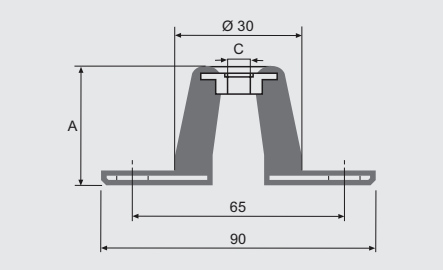

P

Securing clamps.
Secured by means of threaded rod Ø 8 mm. Rubber support load 250 kg. Hardness: 40/45 Shore. Supplied in sets of 4 units.

PAVZ

Rubber anti-vibration mounts that absorb vibration and attenuate the noise produced in the installation.
(1 PAVZ= 4 supports in a bag).

Model	A	B	C	D	ØE	ØF	Max. load (kg)
PAVZ-60 SH 45	60	90	24	76	M6	6,2	15
PAVZ-60 SH 60	60	90	24	76	M6	6,2	25
PAVZ-60 SH 75	60	90	24	76	M6	6,2	45
PAVZ-80 SH 45	80	120	27	100	M8	8,2	45
PAVZ-80 SH 60	80	120	27	100	M8	8,2	80
PAVZ-80 SH 75	80	120	27	100	M8	8,2	130
PAVZ-100 SH 45	100	148	28	124	M10	10,2	105
PAVZ-100 SH 60	100	148	28	124	M10	10,2	180
PAVZ-100 SH 75	100	148	28	124	M10	10,2	247
PAVZ-150 SH 45	150	214	39	182	M14	12,2	149
PAVZ-150 SH 60	150	214	39	182	M14	12,2	286
PAVZ-150 SH 75	150	214	39	182	M14	12,2	390

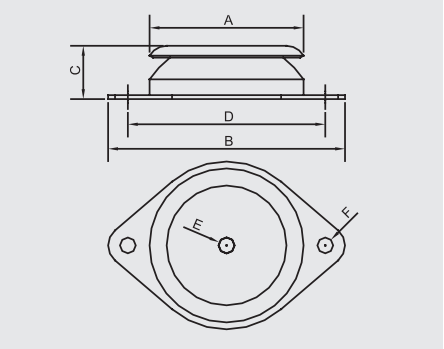

CONTROL AERO-REG

Specific accessory to control the heat recovery units without additional incorporated heater equipped with single-phase motor (models CADB-ND 05 to 30).
Not suitable for controlling the heat recovery units with built-in electric heater or heat recovery units with built-in hot water coil.
Supplied as an accessory (wiring and installation not included).

Functions:
- On / off of recovery.
- Regulation manual / automatic fan speed.
- Detection of fouling of filters (it is necessary to install two switches DPS 2.30, not included with the supply of control).
- Detection of damage to the fans (it is necessary to install two switches DPS 2.30, not included with the supply of control).

Operation:
- Manual potentiometer: fan speed manual control using the potentiometer located at the top.
- Proportional with entry analog. fan speed control using an external probe CO_2 (accessory) humidity and temperature (0-10V / 4-20mA).
- Proportional Integral PI: pressure control or constant airflow through a differential pressure transmitter TDP-D (accessory) (0-10V / 4-20mA).

Model	Electrical supply	Maximum current (A)	Motors output voltage	IP Protection	Operating temperature range	Dimensions LxWxH (mm)
Control AERO-REG	230 VAC	11	110 to 230VAC	IP 55	-10ºC to +50ºC	175x250x120

PROSYS CADB-N

Remote configuration of one or more CONTROL AERO-REG.
- The user can modify parameters and adjust setting values.
- It is possible to connect up to 32 CONTROL AERO-REG to just one PROSYS CADB-N.

RMB

Single phase speed controller by auto-transformer.
IP56 ABS casing.
Electrical supply: 1/230V/50-60Hz.
Five position knob (0/1/2/3/4).
Voltage: 80, 105, 130, 160 and 230 V.
Pilot light.

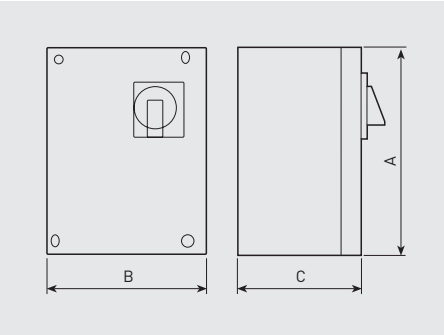

Model	Maximum current (A)	Casing	IP Protection	Dimensions			Weight (kg)
				A	B	C	
RMB-1,5	1,5	ABS	IP56	230	180	95	3
RMB-3,5	3,5						4
RMB-8	8			310	230	125	10
RMB-10	10						12

REMOTE MONITORING MODULE

Allows the remote monitoring of heat recovery and air handling units that use PRO-REG and Corrigo controllers. Monitors chosen MODBUS parameters and at set intervals sends data to a web-based site. Additionally, the module sends alerts via SMS message and/or email to inform of a status change in the unit such as filter cleaning required, fan failure and unit switched off. This live update facility can also be used to provide periodic (usually Monthly) 'health checks' on units and these can be downloaded in a csv format for incorporation in reports and to import into other documents. The unit can be supplied as a retrofit item as well as fitted to new ventilation equipment. Eliminates the need for routine maintenance checks by facilities management personnel.

Use with	Dimensions	Input/Output	Parameters	Mounting
RHE & PRO-REG ranges	H x W x D (mm) 90 x 50 x 85mm	Input: 230V Input: MODBUS Out: R45J LAN	Temperatures, Fan status, Filter status	Din-rail Mounting

- The module is provided with din-rail mounting clips to allow easy integration into the ventilation unit.

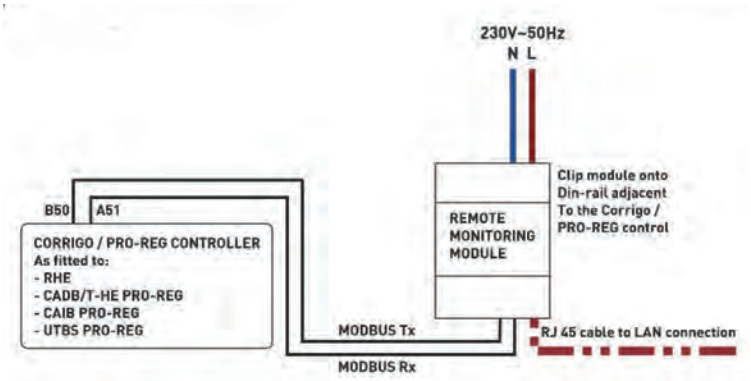

REB ECOWATT

Remote speed control.
Enables the speed control of the fan continuously, manual and remote
Power supply: 1~230 V.

Model	IP Protection	Power (VA)	Class	Operating temperature range (ºC)	Dimensions LxWxH (mm)
REB-ECOWATT	IP44	2300	Class II	-10ºC to +50ºC	80x68x80

RMT

Three phase speed controller by auto-transformer.
IP54 ABS casing for RMT-1,5 and RMT-2,5 models.
IP54 metallic casing from RMT-5 to RMT-12 models.
Electrical supply: 3/400V/50-60Hz.
Five position knob (0/1/2/3/4).
Voltage: 90, 150, 200, 280 and 400 V.
Pilot light.

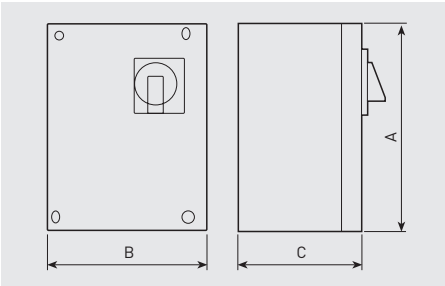

Model	Maximum current (A)	Casing	IP Protection	Dimensions			Weight (kg)
				A	B	C	
RMT-1,5	1,5	ABS	IP54	300	220	125	6
RMT-2,5	2,5	ABS		300	220	125	13
RMT-5	5	Metallic		300	247	200	16
RMT-8	8	Metallic		400	300	205	21
RMT-12	12	Metallic		400	300	205	30

VAPZ

Electronic single-phase regulator that controls the fan speed with a simple contact (presence detector) or an analogical input, 0-10 V or 4-20 mA (CO_2 probe for relative humidity % RH).
Power supply: 1~230 V.

Model	Electrical supply	Maximum current (A)	Voltage	IP Protection	Operating temperature range	Dimensions LxWxH (mm)
VAPZ-3	230V-50Hz	3	80 to 230V	IP54	-10ºC to +50ºC	205x115x92
VAPZ-5		5				
VAPZ-11		11				

PACK PR

Single phase motors.
Allows speed control of single phase fan by voltage variation.
Especially suited for constant pressure systems.
Includes a power cable and pressure tube.
Integrated pressure transducer (12VDC).
Supplied with cable glands.
Function integrated boost fan, adjustable from 10-60 min.
Display with three digits.
Entries for remote control "ON/OFF" + "select maximum speed".
Configurable input for analog sensor current / voltage / NTC thermistor sensor / Pt1000.

Models	Max. nominal current (A)	Pressure range (Pa)	Dimensions LxWxH (mm)
PACK PR 5A	5	0-300	176x200x80
PACK PR 11A	11	0-800	176x200x80

PACK PR	
Power supply	Single phase 230V 50/60Hz
Voltage range	110 - 230V
ON / OFF input	Volt free contacts
Maximum speed input	
Remote setpoint input (control mode)	Signal 4-20mA or voltage 0-10Vdc
Measurement input (servo control or control mode)	Signal 4-20mA or voltage 0-10Vdc, or NTC thermistor sensor, or Pt1000 sensor
Outputs	Sensor supply: 24Vdc SELV (100mA max) Master-slave: 0-10Vdc (10mA max)
Electrical insulation	Class 1
IP Protection	IP55
Connections available	1 to 2.5 mm² Glands provided: 5xPg7 + 3xPg11
Conditions of use	-10 to +50 ° C, max 95% RH

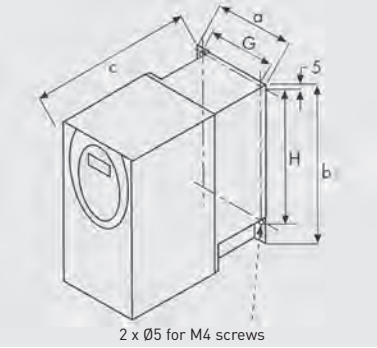

Dims.	a	b	c	G	H
T1	72	145	132	60	121,5
T2	72	145	142	60	121,5

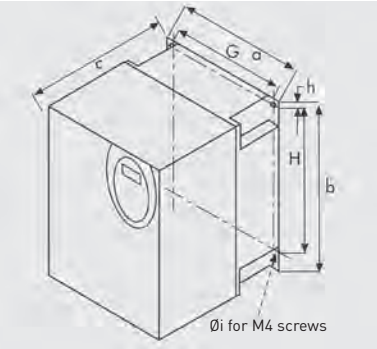

Dims.	a	b	c	G	h	H	Ø i	nº M4
T3	107	143	152	93	5	121,5	5	2
T4	142	184	152	126	6,5	157	5	4
T5	180	232	172	160	5	210	5	4
T6	245	330	192	225	7	295	6	4

VFTM IP21

For three phase motors from 0.37 to 15 kW.
Din rail mounting (IP21).
Voltage supplies: single phase 230V 50/60Hz (VFTM MONO), three phase 400V 50/60Hz (VFTM TRI).
External display of parameters (current, power, torque, speed, frequency...).
Available optional accessory: a remote control ON/OFF + potentiometer.
Integrated EMC level A filter.
Regulator and preset PI.
Run/Fault relay output contacts.
Motor overload and shortcut protections.

The selection of the adjustable frequency drive has to be made with the maximum current absorbed of the fan or extractor.

Model	Power motor (kW)	Maximum current (A)	Power dissipated (W)	Size reference	Weight (kg)
Single phase supply 230V-50/60Hz, three phase output 230V					
VFTM MONO 0,18	0,18	1,5	24	T1	1,5
VFTM MONO 0,37	0,37	3,3	41	T1	1,5
VFTM MONO 0,55	0,55	3,7	46	T2	1,5
VFTM MONO 0,75	0,75	4,8	60	T2	1,5
VFTM MONO 1,1	1,1	6,9	74	T3	1,8
VFTM MONO 1,5	1,5	8	90	T3	1,8
VFTM MONO 2,2	2,2	11	123	T4	3,1
Three phase supply 400V-50/60Hz, three phase output 400V					
VFTM TRI 0,37	0,37	1,5	32	T3	1,8
VFTM TRI 0,55	0,55	1,9	37	T3	1,8
VFTM TRI 0,75	0,75	2,3	41	T3	1,8
VFTM TRI 1,1	1,1	3	48	T3	1,8
VFTM TRI 1,5	1,5	4,1	61	T3	1,8
VFTM TRI 2,2	2,2	5,5	79	T4	3,1
VFTM TRI 3	3	7,1	125	T4	3,1
VFTM TRI 4	4	9,5	150	T4	3,1
VFTM TRI 5,5	5,5	14,3	232	T5	6,5
VFTM TRI 7,5	7,5	17	269	T5	6,5
VFTM TRI 11	11	27,7	397	T6	11
VFTM TRI 15	15	33	492	T6	11

REB-CVF

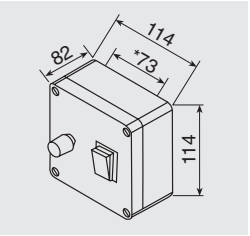

Remote control
ON/OFF + potentiometer

VFTM IP54

Adjustable frequency drives.
For three phase motors from 0.37 to 15 kW.
Din rail mounting (IP54).
Voltage supplies: single phase 230V 50/60Hz (VFTM MONO), three phase 400V 50/60Hz (VFTM TRI).
External display of parameters (current, power, torque, speed, frequency...).
Available optional accessory: a remote control ON/OFF + potentiometer.
Integrated EMC level A filter.
Regulator and preset PI.
Run/Fault relay output contacts.
Motor overload and shortcut protections.

The selection of the adjustable frequency drive has to be made with the maximum current absorbed of the fan or extractor.

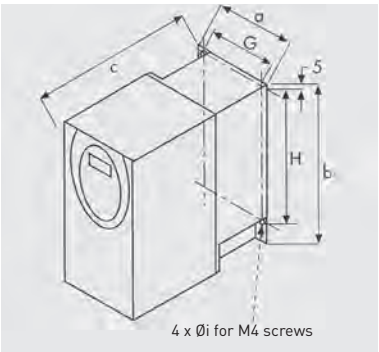

Dims.	a	b	c	G	H	Øi
T1	210	240	163	192	218	5,5
T2	215	297	192	197	277	5,5
T3	230	340	222	212	318	5

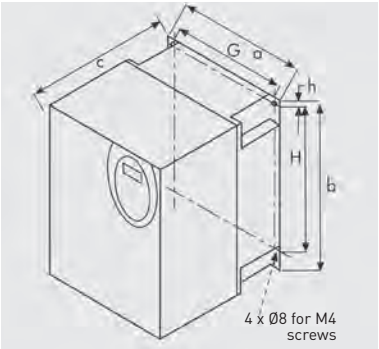

Dims.	a	b	c	G	h	H
T4	320	512	276,5	6,5	279	480
T5	440	625	276,5	5	399	594

Model	Power motor (kW)	Maximum current (A)	Power dissipated (W)	Size reference	Weight (kg)
Single phase supply 230V-50/60Hz, three phase output 230V					
VFTM MONO 0,18	0,18	1,5	24	T1	1,5
VFTM MONO 0,37	0,37	3,3	41	T1	1,5
VFTM MONO 0,55	0,55	3,7	46	T1	1,5
VFTM MONO 0,75	0,75	4,8	60	T1	1,5
VFTM MONO 1,1	1,1	6,9	74	T2	1,8
VFTM MONO 1,5	1,5	8	90	T2	1,8
VFTM MONO 2,2	2,2	11	123	T3	3,1
Three phase supply 400V-50/60Hz, three phase output 400V					
VFTM TRI 0,37	0,37	1,5	32	T2	1,8
VFTM TRI 0,55	0,55	1,9	37	T2	1,8
VFTM TRI 0,75	0,75	2,3	41	T2	1,8
VFTM TRI 1,1	1,1	3	48	T2	1,8
VFTM TRI 1,5	1,5	4,1	61	T2	1,8
VFTM TRI 2,2	2,2	5,5	79	T3	3,1
VFTM TRI 3	3	7,1	125	T3	3,1
VFTM TRI 4	4	9,5	150	T3	3,1
VFTM TRI 5,5	5,5	14,3	232	T4	6,5
VFTM TRI 7,5	7,5	17	269	T4	6,5
VFTM TRI 11	11	27,7	397	T5	11
VFTM TRI 15	15	33	492	T5	11

REB-CVF

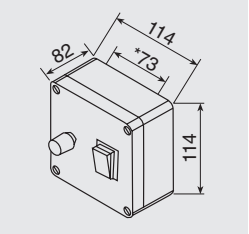

Remote control ON / OFF + potentiometer

VFKB IP65

For three phase motors from 0.37 to 4 kW.
Die cast aluminium IP65 case.
Simple to operate (does not require programming).
Voltage supplies: single phase 230V-50/60Hz (VFKB 24 and 27) three phase 400V-50/60Hz (VFKB 45 and 48).
Motor kW selection jumper.
Power on and drive status leds.
Speed selection with potentiometer.
ON/OFF switch.
Run/Fault relay output contacts.
Motor overload and shortcut protections.
RFI/EMI level A filter.

The selection of the adjustable frequency drive has to be made with the maximum current absorbed of the fan or extractor.

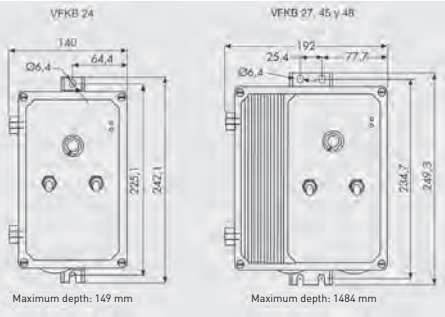

Model	Power motor (kW)	Maximum current (A)	Weight (kg)
Single phase supply 230V-50/60Hz, three phase output 230V			
VFKB 24	0,37	2,2	2,7
	0,55	3,6	
VFKB 27	0,75	4,7	4,7
	1,1	6,1	
	1,5	6,7	
Three phase supply 400V-50/60Hz, three phase output 400V			
VFKB 45	0,37	1,8	4,7
	0,55	2,1	
	0,75	2,8	
	1,1	3,4	
	1,5	4,6	
VFKB 48	2,2	5,6	4,7
	3	7,8	
	4	8,3	

LxWxH (mm): 85 x 90 x 120

PARO/MARCHA 5P and PARO/MARCHA 8P

ON/OFF Electrical isolation switch.

PARO/MARCHA 5P (ON/OFF 5P):
Five pole electrical isolation switch.
One speed motor application (3 wires).
Maximum absorbed current: 20A.
Open / close position reset.
IP66 / IP67 protection.
3x380V / 3x440V motors.
1x220-240V motors.

PARO/MARCHA 8P (ON/OFF 8P):
Eight pole electrical isolation switch.
Two speed motor application (6 wires).
Maximum absorbed current: 20A.
Open / close position reset.
IP55 protection.
3/380-440V motors.

INTZ

ON/OFF electrical isolation switch.
3 and 6 pole electrical isolation switch.
3-point lock.
Open / close position reset.
230V single-phase or 400V-50/60Hz three-phase motor.
IP55 Protection Index: outdoor installation if possible.
Supplied with cable.

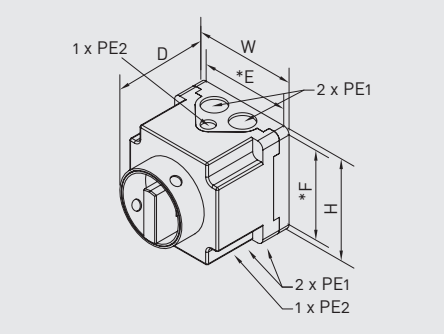

Model	Switch output main contacts (AC23)		W (mm)	H (mm)	D (mm)	E* (mm)	F* (mm)	PE1	PE2
	Confort	Smoke extract**							
1 speed									
INTZ 1V15	15,4 A	10,2 A	90,5	90,5	102	80	80	M20	M12
INTZ 1V22	22,4 A	14,9 A	115	115	136	100	100	M25	M16
INTZ 1V29	29,8 A	19,8 A	115	115	136	100	100	M25	M16
INTZ 1V43	43 A	28,6 A	145	145	158	130	130	M25/32/40	M20
INTZ 1V68	68 A	45,3 A	167	220	144	151	203	M25/32/40	M20
2 speed									
INTZ 2V15	15,4 A	10,2 A	90,5	90,5	139	80	80	M20	M12
INTZ 2V22	22,4 A	14,9 A	115	115	163	100	100	M25	M16
INTZ 2V29	29,8 A	19,8 A	115	115	163	100	100	M25	M16
INTZ 2V43	43 A	28,6 A	145	145	188	130	130	M25/32/40	M20
INTZ 2V68	68 A	45,3 A	216	267	170	190	242	M40/50	M20

* Mounting dimensions.
** Accordance with the regulations: smoke extract size = size confort/1.5.

LxWxH (mm): 110 x 57 x 80

PRESOSTATO DPS

Differential pressure switch to control the fan running and the filter clogging up.
Protection class: IP54.
Can be used outside.

Model	ΔP
PRESOSTATO DPS 2-30	20 - 300 Pa
PRESOSTATO DPS 10-100	100 - 1000 Pa
PRESOSTATO DPS 100-500	1000 - 5000 Pa

LxWxH (mm): 86 x 80 x 50

THE 16/4 A

Surface-mounted adjustable thermostat.
- 230V-50Hz.
- IP54. Can be installed outdoors.
- Maximum current: 4A (inductive).
- Temperature range: 0ºC to +40ºC.
- Differential: ± 0.75 K.

LxWxH (mm): 85 x 125 x 58

THE-F thermostat with capillary tube anti-frost sensor

Thermostat with capillary tube sensor to prevent the risk for freezing.
- IP30.
- Contact capacity: 16A to 1-230V-50Hz.
- Temperature range: -18ºC to +13ºC.
- Includes mounting support, channel and set of 3m long capillary tubes.

MBE

Designed to be installed on the fans discharge side. The minimum air speed through the heater must be 1,5 m/s. Maximum air temperature through the heater: 40ºC.
The heaters are fitted with:
- Armoured heating element.
- Double protection circuit to connect to the heater control circuit by means of a safety overheat automatic thermostat connected in series with another safety overheat manual reset thermostat (RESET).
- Wiring box IP43.

Available temperature sensors in the duct, ambient temperature sensors and speed controllers to complete the installation and to adjust the air temperature according to every need.

SELECTION EXAMPLE

DATA:
- Airflow: 700 m³/h (Q)
- Temp. of supplied air: 5ºC
- Temp. of exhausted air: 27ºC

ELECTRIC HEATER POWER REQUIRED:
P = Qx0,36xΔT = 700x0,36x22 = 5544 W

HEATER SELECTION MBE-200/50T or MBE-250/60T (Diagram 2)
The final selection depends on:
- Total system pressure drop
- Desired sound level
- Available space

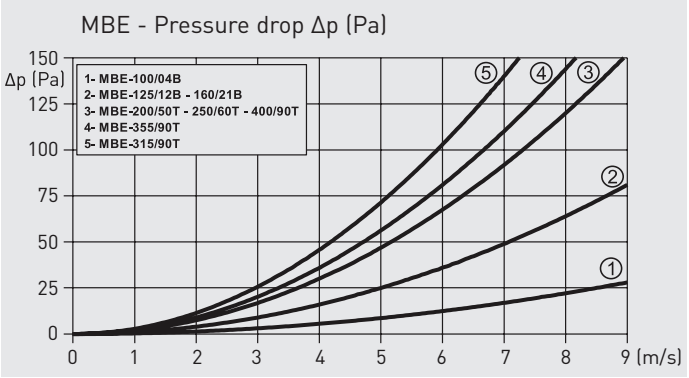

Diagram 1

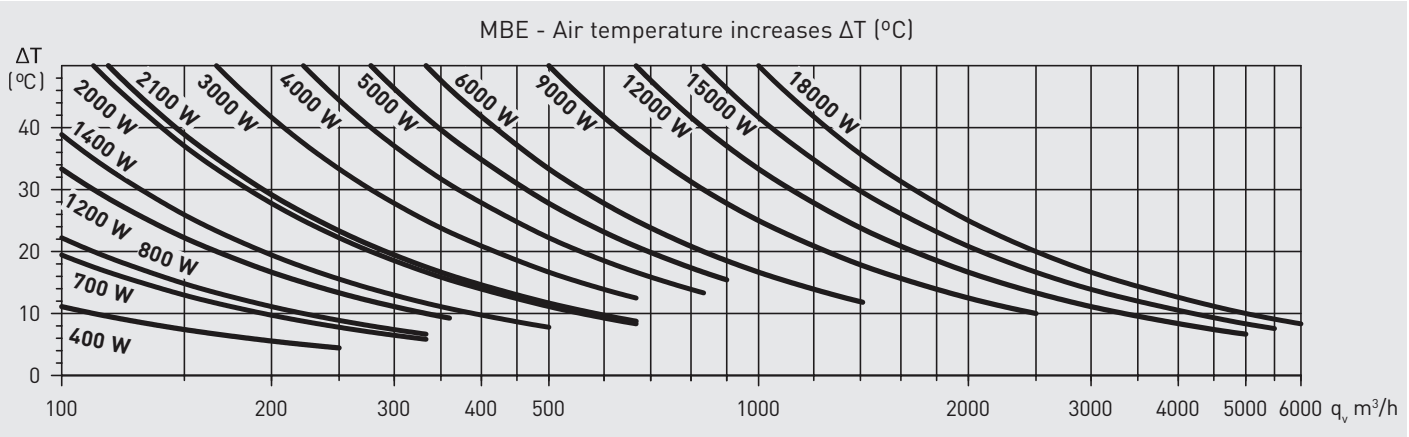

Diagram 2

Models	Voltage (W)	Power (V)	Minimum airflow (m³/h)	Ø (mm)	Controller type
MBE-100/04B	1/230	400	50	100	PULSER
MBE-100/08B	1/230	800	50	100	PULSER
MBE-125/04B	1/230	400	70	125	PULSER
MBE-125/08B	1/230	800	70	125	PULSER
MBE-125/12B	1/230	1200	70	125	PULSER
MBE-160/07B	1/230	700	110	160	PULSER
MBE-160/14B	1/230	1400	110	160	PULSER
MBE-160/21B	1/230	2100	110	160	PULSER
MBE-200/21B	1/230	2100	170	200	PULSER
MBE-200/20T	2/400	2000	170	200	PULSER
MBE-200/30T	2/400	3000	170	200	PULSER
MBE-200/40T	2/400	4000	170	200	PULSER
MBE-200/50T	2/400	5000	170	200	PULSER
MBE-200/60T	2/400	6000	170	200	TTC-25/TTC-2000
MBE-200/90T	3/400	9000	170	200	TTC-25
MBE-250/20T	2/400	2000	270	250	PULSER
MBE-250/30T	2/400	3000	270	250	PULSER
MBE-250/40T	2/400	4000	270	250	PULSER
MBE-250/50T	2/400	5000	270	250	PULSER
MBE-250/60T	2/400	6000	270	250	PULSER
MBE-250/90T	3/400	9000	270	250	TTC-25/TTC-2000
MBE-315/30T	2/400	3000	430	315	PULSER
MBE-315/60T	2/400	6000	430	315	PULSER
MBE-315/90T	3/400	9000	430	315	TTC-25/TTC-2000
MBE-315/120T	3/400	12000	430	315	TTC-25/TTC-2000
MBE-315/150T	3/400	15000	430	315	TTC-25/TTC-2000
MBE-355/60T	2/400	6000	540	355	PULSER
MBE-355/90T	3/400	9000	540	355	TTC-25/TTC-2000
MBE-355/120T	3/400	12000	540	355	TTC-25/TTC-2000
MBE-355/150T	3/400	15000	540	355	TTC-25/TTC-2000
MBE-355/180T	3/400	18000	540	355	TTC-40F
MBE-400/60T	2/400	6000	680	400	PULSER
MBE-400/90T	3/400	9000	680	400	TTC-25/TTC-2000
MBE-400/120T	3/400	12000	680	400	TTC-25/TTC-2000
MBE-400/150T	3/400	15000	680	400	TTC-25/TTC-2000
MBE-400/180T	3/400	18000	680	400	TTC-40F
MBE-500/60T	2/400	6000	1.070	500	PULSER
MBE-500/90T	3/400	9000	1.070	500	TTC-25
MBE-500/120T	3/400	12000	1.070	500	TTC-25
MBE-500/150T	3/400	15000	1.070	500	TTC-25
MBE-500/180T	3/400	18000	1.070	500	TTC-40F

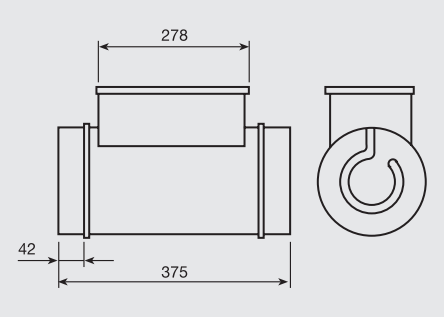

MBE-R

Designed to be installed on the fans discharge side.The minimum air speed through the heater must be 1,5 m/s. Maximum air temperature through the heater: 40ºC.

The heaters are fitted with:

- Electrical heater regulation, incorporated.
- Armoured heating element.
- Double protection circuit to connect to the heater control circuit by means of a safety overheat automatic thermostat connected in series with another safety overheat manual reset thermostat (RESET).
- Wiring box IP43.

For correct operation, it must be installed with a temperature sensor (TG-K, TG-R430 or TG-R530). The temperature sensor installation in the duct TG-K must be a minimum distance of 1 meter between the sensor and the heater.

SELECTION EXAMPLE

DATA:
- Airflow: 700 m³/h (Q)
- Temp. of supplied air: 5ºC
- Temp. of exhausted air: 27ºC

ELECTRIC HEATER POWER REQUIRED:
P = Qx0,36xΔT = 700x0,36x22 = 5544 W

HEATER SELECTION MBE-200/50T-R or MBE-250/60T-R (Diagram 2)
The final selection depends on:
- Total system pressure drop
- Desired sound level
- Available space

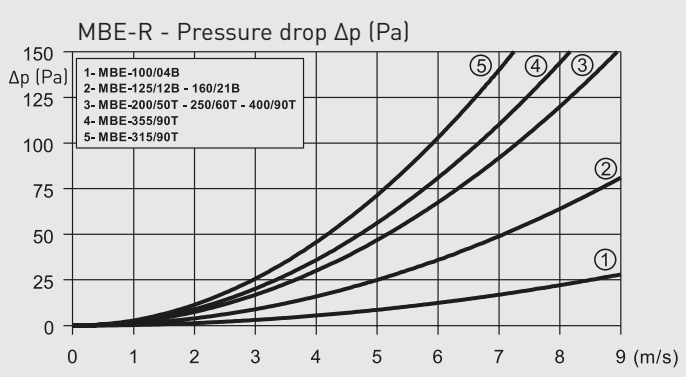

Diagram 1

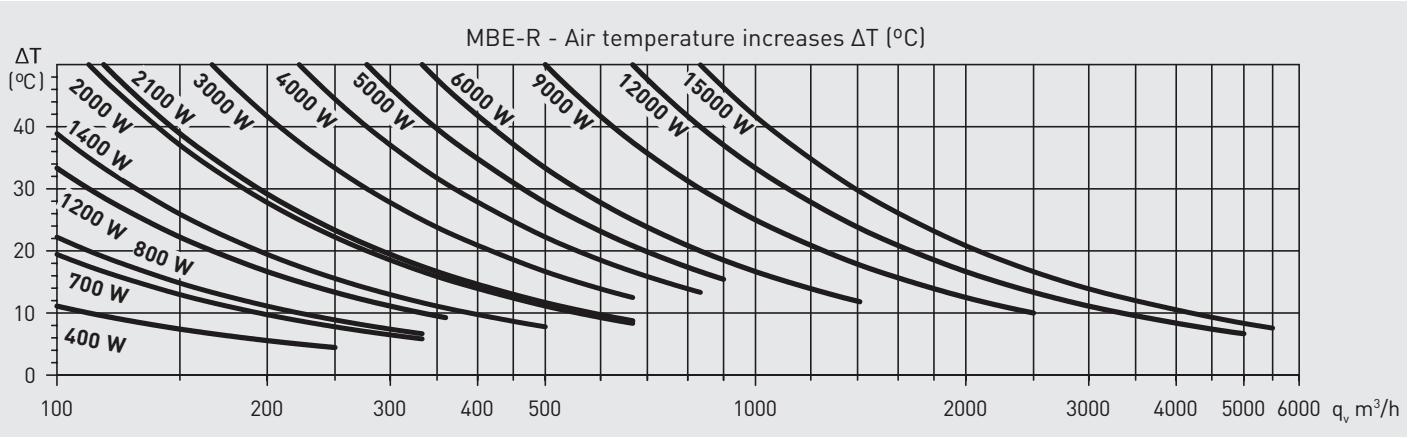

Diagram 2

Models	Voltage (W)	Power (V)	Minimum airflow (m^3/h)	Ø (mm)
MBE-100/04B-R	1/230	400	50	100
MBE-100/08B-R	1/230	800	50	100
MBE-125/04B-R	1/230	400	70	125
MBE-125/08B-R	1/230	800	70	125
MBE-125/12B-R	1/230	1200	70	125
MBE-160/07B-R	1/230	700	110	160
MBE-160/14B-R	1/230	1400	110	160
MBE-160/21B-R	1/230	2100	110	160
MBE-200/20T-R	2/400	2000	170	200
MBE-200/30T-R	2/400	3000	170	200
MBE-200/40T-R	2/400	4000	170	200
MBE-200/50T-R	2/400	5000	170	200
MBE-200/60T-R	2/400	6000	170	200
MBE-250/20T-R	2/400	2000	270	250
MBE-250/30T-R	2/400	3000	270	250
MBE-250/40T-R	2/400	4000	270	250
MBE-250/50T-R	2/400	5000	270	250
MBE-250/60T-R	2/400	6000	270	250
MBE-250/90T-R	3/400	9000	270	250
MBE-315/30T-R	2/400	3000	430	315
MBE-315/60T-R	2/400	6000	430	315
MBE-315/90T-R	3/400	9000	430	315
MBE-315/120T-R	3/400	12000	430	315
MBE-355/60T-R	2/400	6000	540	355
MBE-355/90T-R	3/400	9000	540	355
MBE-355/120T-R	3/400	12000	540	355
MBE-400/60T-R	2/400	6000	680	400
MBE-400/90T-R	3/400	9000	680	400
MBE-400/120T-R	3/400	12000	680	400
MBE-400/150T-R	3/400	15000	680	400
MBE-500/60T-R		6000	1.070	500
MBE-500/90T-R		9000	1.070	500
MBE-500/120T-R		12000	1.070	500

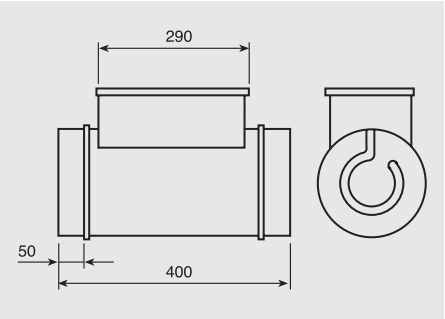

LxWxH (mm): 83 x 40 x 153

PULSER

Single phase electric heater controller. Electronic controller to regulate the heat output of electric heater in order to maintain a constant pre-selected temperature. Depending on the selected temperature, the controller pulses the entire power output and uses a time-proportional control to maintain that temperature.

Frequency (Hz)	Electrical supply		Voltage (V)	Minimum		Maximum		Operating temperature	Thermostat adjustment (airtemp)
	Supply voltage (V)	IP Protection		Current (A)	Power (W)	Current (A)	Power (W)		
50-60	220-415	IP30	230 V	1	230	16	3680	0-50°C	0-30°C
			400 V	1	400	16	6400		

LxWxH (mm): 83 x 40 x 153

PULSER-ADD

Single phase electric heater controller. Supplementary unit for slave control from another PULSER to control electric heaters with power ratings high to the PULSER capacity (3600W-230V).

LxWxH (mm): 83 x 40 x 153

PULSER-M

Single phase electric heater controller.
Set point: 0-30°C, the sensor determines the scale range (for use with NTC-sensor).
Output (load): 16 A (min. 1 A).
Protection class: IP30.
Input regulation maximum and minimum.
Maximum absorbed power: 3.6 kW.

LxWxH (mm): 115 x 59 x 88

PULSER-D

Single phase electric heater controller. Similar controller to the PULSER designed to be fitted in a cabinet on DIN-rail (IP20).
Set point: 0-30°C, the sensor determines the scale range (for use with NTC-sensor).
Output (load): 16 A (min. 1 A).
Maximum absorbed power: 3.6 kW.

LxWxH (mm): 160 x 140 x 280

TTC-2000

Three phase electric heater controller. Electronic controller to regulate the heat output for three phase electric heater in order to maintain a constant pre-selected temperature. Depending on the selected temperature, the controller pulses the entire power output and uses a time-proportional control to maintain that temperature.
Control signal: 0-10 V (external signal).

Frequency (Hz)	Electrical supply		Voltage (V)	Minimum		Maximum		Operating temperature	Thermostat adjustment (airtemp)
	Supply voltage (V)	IP Protection		Current (A)	Power (W)	Current (A)	Power (W)		
50-60	380-415	IP30	230 V 400 V	3	1,5	25	17	0-50ºC	0-30ºC

LxWxH (mm): 60 x 30 x 35

TTS-1

Additional PCB to increase the output power controlled.
The load connected to TT-S1 should be of equal size to the load connected to the TTC2000.
TTC2000 detects if a TT-S1 is installed and automatically adapts the control function accordingly.

LxWxH (mm): 195 x 95 x 220

TTC-25 and TTC-40F

Three-phase electric heater controller. Electronic controllers to regulate the heat output for three phase electric heaters and controllers in order to maintain a constant pre-selected temperature. Depending on the selected temperature, the controllers pulse the entire power output and uses a time-proportional control to maintain that temperature. The TTC-25 and 40F are designed to be fitted in a cabinet on DIN-rail.
Supply voltage: three phase 210-415 V.
- Output: TTC25: 25 A, 400 V, 17 kW.
  TTC40: 40 A, 400 V, 27 kW.

Set point: 0-30°C (sensor determines the scale range).
Sensor inputs: Two (2), main- and max, min. limit sensors.
Control signal: 0-10 V.
Protection class: IP20.

LxWxH (mm): 70 x 30 x 70

TG-R

Used in conjunction with electric heaters and controllers.
NTC type with liner scale.
Range of temperature 0-30ºC.
Protection class IP30.
2 models:
- Room sensor with set point adjustment, 0-30°C (TG-R430).
- Room sensor without set point adjustment, 0-30°C (TG-R530).

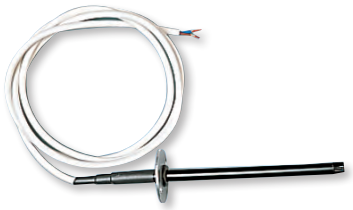

TG-K

Duct temperature sensor.
Used in conjunction with electric heater and controller.
NTC type with liner scale.
Protection class IP20.
Models:
- TG-K330: from 0 to 30ºC.
- TG-K360: from 0 to 60ºC.
- TG-K310: from -20 to 10ºC.

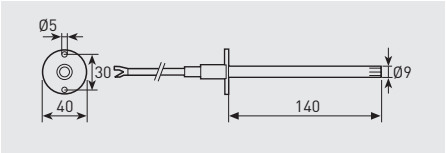

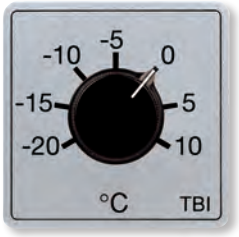

LxWxH (mm): 60 x 38 x 60

TBI

External potentiometer.

TBI-10
Potentiometer mounted on the main board panel for setting temperature between -20 and +10ºC.
Used with the controller and a TG-K310 duct sensor to set the minimum air temperature beforeentering in the heat exchanger.

TBI-30
Potentiometer mounted on the main board panel for setting temperature between 0 and +30ºC.
Used with the controller and with a TG-K330 duct sensor to set the air temperature after the electric heater in post heating operation.

MCR-1

Timer with set point between 1 second and 100 hours.
Used in an electric heating system to delay the fan switch off after disconnecting the system.

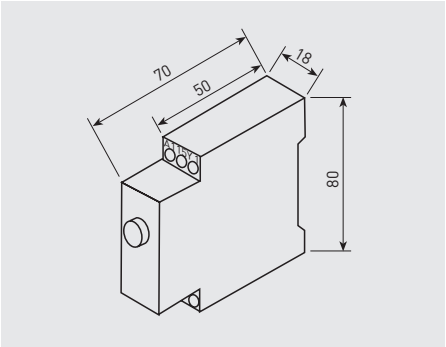

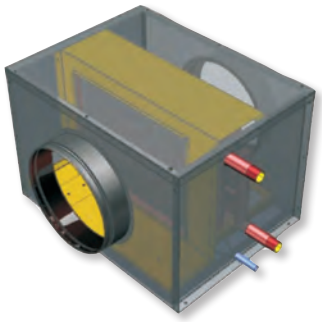

BA-AF

Circular duct coolers for chilled water. The casing is made of galvanized sheet. The coil has copper tubes and aluminium fins. An inspection door cover simplifies the maintainance.
The cooler has a 10 mm internal isolation to avoid condensations. Drip tray for condensate collection, with 16 mm drain connection.

Model	$q_{max.}$ (m^3/h)	Pressure drop (Pa)	Speed (m/s)	Input air (ºC/%HR)	Power (kW)	Output air (ºC/%HR)	Waterflow (l/h)	Water pressure drop (kPa)	Ø d (")	Dimensions (mm)			Ø D (mm)	Weight (kg)
										W	H	L		
BA-AF 200	450	90	2,46	27/50	2,3	16/83	402	23,3	3/4"	360	360	400	200	13
BA-AF 250	900	100	2,60	27/50	4,5	16/82	765	14,12	1"	525	360	400	250	17
BA-AF 315	1200	100	2,61	27/50	5,6	17/80	960	9,51	1"	475	500	500	315	22
BA-AF 355/18	1900	100	2,61	27/50	9,5	16/82	1630	14,49	1"	650	550	550	355	30
BA-AF 355/23	2400	100	2,69	27/50	12,2	16/82	2085	18,8	1"	725	530	600	355	38
BA-AF 400	3000	100	2,66	27/50	15	16/82	2570	14,27	1"	875	530	700	400	45
BA-AF 450	4400	100	2,68	27/50	23,2	16/83	3980	27,88	1 1/4"	1050	600	750	450	74
BA-AF 500	5500	100	2,68	27/50	29	16/83	4930	24,46	1 1/4"	1175	650	800	500	86
BA-AF 630	8000	100	2,68	27/50	40	16/82	6925	15,29	1 1/2"	1300	820	800	630	106

Values under the following conditions: T Water input: 7ºC, T water output: 12ºC.

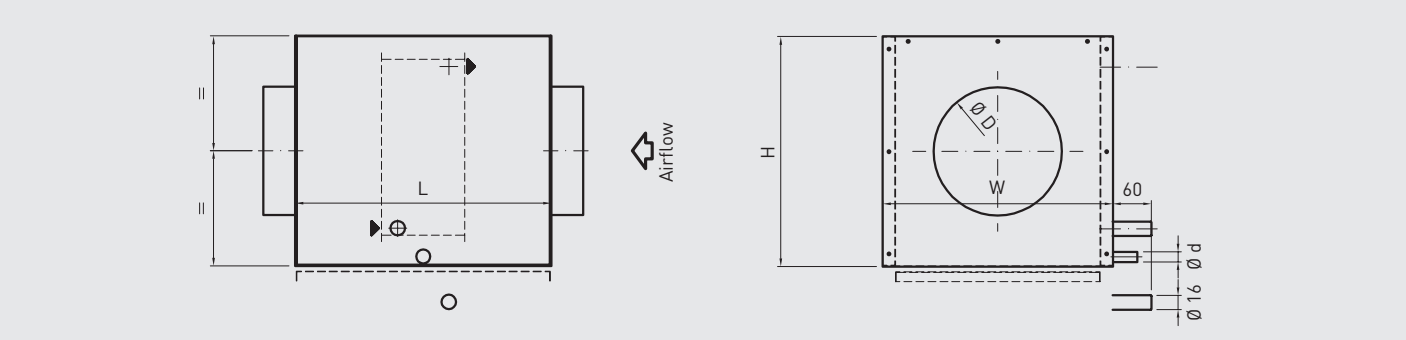

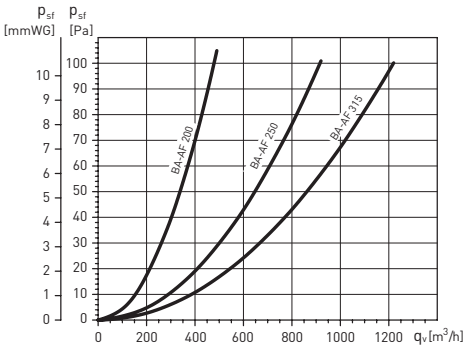

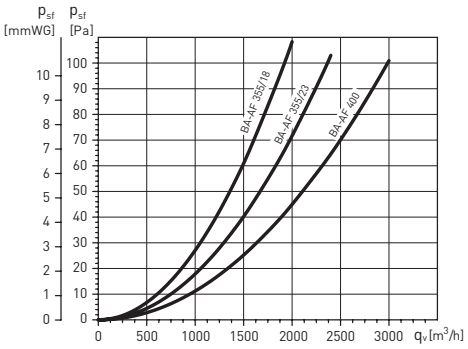

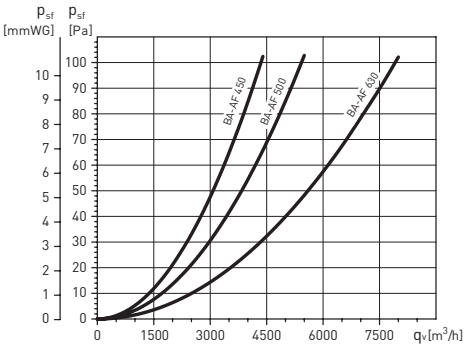

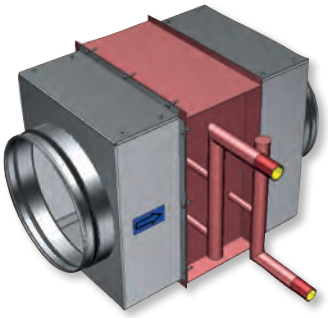

BA-AC-N

Circular, hot water, duct heaters. The casing is made of galvanized sheet, with circular connections.
The coil has copper tubes and aluminium fins. Max. temperature 100ºC, max. pressure 10bar.

Model	$q_{max.}$ (m^3/h)	Pressure drop $q_{max.}$ (Pa)	Speed (m/s)	Water temperature 80/60°C				Water temperature 50/45°C				Ø d (")	Dimensions			Ø D (mm)	Weight (kg)
				Power (kW)*	ΔT (°C)*	Waterflow (l/h)	Water pressure drop (kPa)	Power (kW)*	ΔT (°C)*	Waterflow (l/h)	Water pressure drop (kPa)		W (mm)	H (mm)	L (mm)		
BA-AC-N 200	450	35	2.46	3,3	22	146	1,49	2,1	14	367,9	8,35	1/2"	360	360	400	200	9
BA-AC-N 250	900	40	2.60	6,7	22	294	2,43	4,2	14	731	13,37	1/2"	525	360	400	250	12
BA-AC-N 315	1200	40	2.61	8,9	22	391	2,56	5,6	14	973	14,09	3/4"	475	500	500	315	16
BA-AC-N 355/18	1900	40	2.61	14,5	22	636	4,49	8,9	14	1.561	24,25	1"	650	500	550	355	20
BA-AC-N 355/23	2400	40	2.69	18,1	22	796	4,23	11,2	14	1.952	22,69	1"	725	530	600	355	25
BA-AC-N 400	3000	40	2.66	22,5	22	992	3,58	14,0	14	2.441	19,43	1"	875	530	700	400	33
BA-AC-N 450	4400	40	2.68	33,5	22	1.476	5	20,7	14	3.564	26,69	1 1/4"	1050	600	750	450	42
BA-AC-N 500	5500	40	2.68	41,4	22	1.820	3,90	25,6	14	4.470	21,23	1 1/4"	1175	650	800	500	53
BA-AC-N 630	8000	40	2.68	60,3	22	2.652	3,94	37,3	14	6.511	21,44	1 1/2"	1300	820	800	630	65

* Air input: 15ºC.

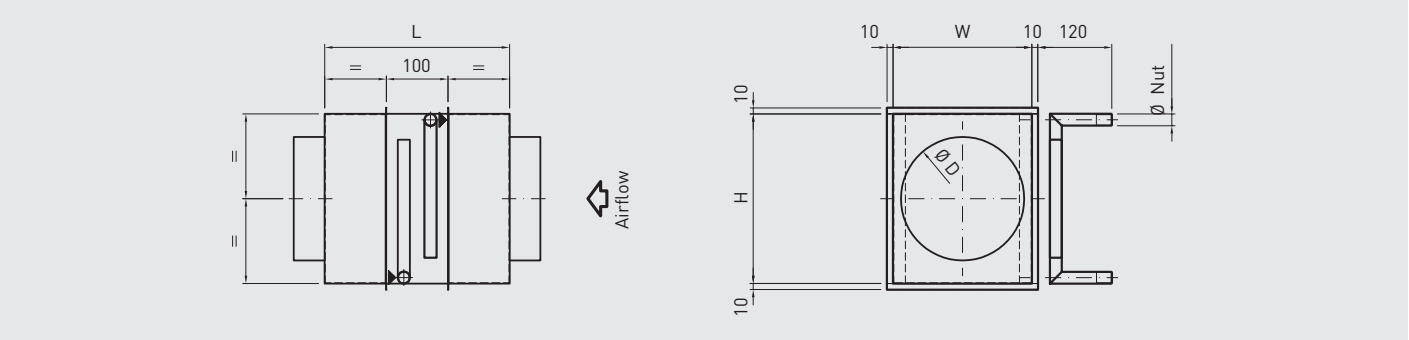

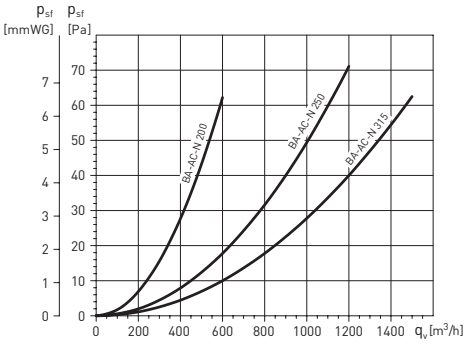

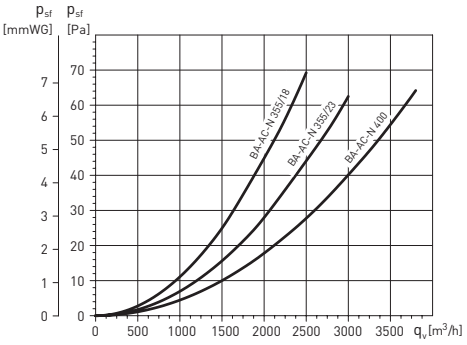

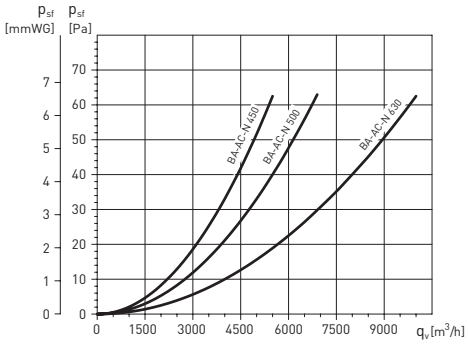

PWW mounting kits

Complete MBW water coil mounting kits.
Water flow and temperature control.
Thermal insulation.
3 operating levels.
Motor supplied: 24 VAC.
Water temperature thermometer.
Manual water shutters.
Flexible ducts for connecting the water coil.
Watertight seal to prevent leaks.
AQUA 24TF temperature controller with 24VAC.
230V/24VAC safety transformer.
Anti-frost sensor and duct.
Anti-frost alarm contact: 24V and 230V 2A potential free contact.
When the pump is not directly connected to the hot water system, the THE 16/4 A ambient thermostat must be used to start the heating cycle.

Model	Units	PWW-SE1	PWW-SE3
Maximum pressure drop	(bar)	3	3
Maximum temperature	(°C)	115	115
Battery side connection	(inches)	3/4"	1"
Boiler side connection	(inches)	1 1/2"	2"
Minimum waterflow	(l/h)	300	1200
Maximum waterflow	(l/h)	1300	2800
Dimensions (LxWxH)	(mm)	450x250x200	450x250x200

Installation diagram

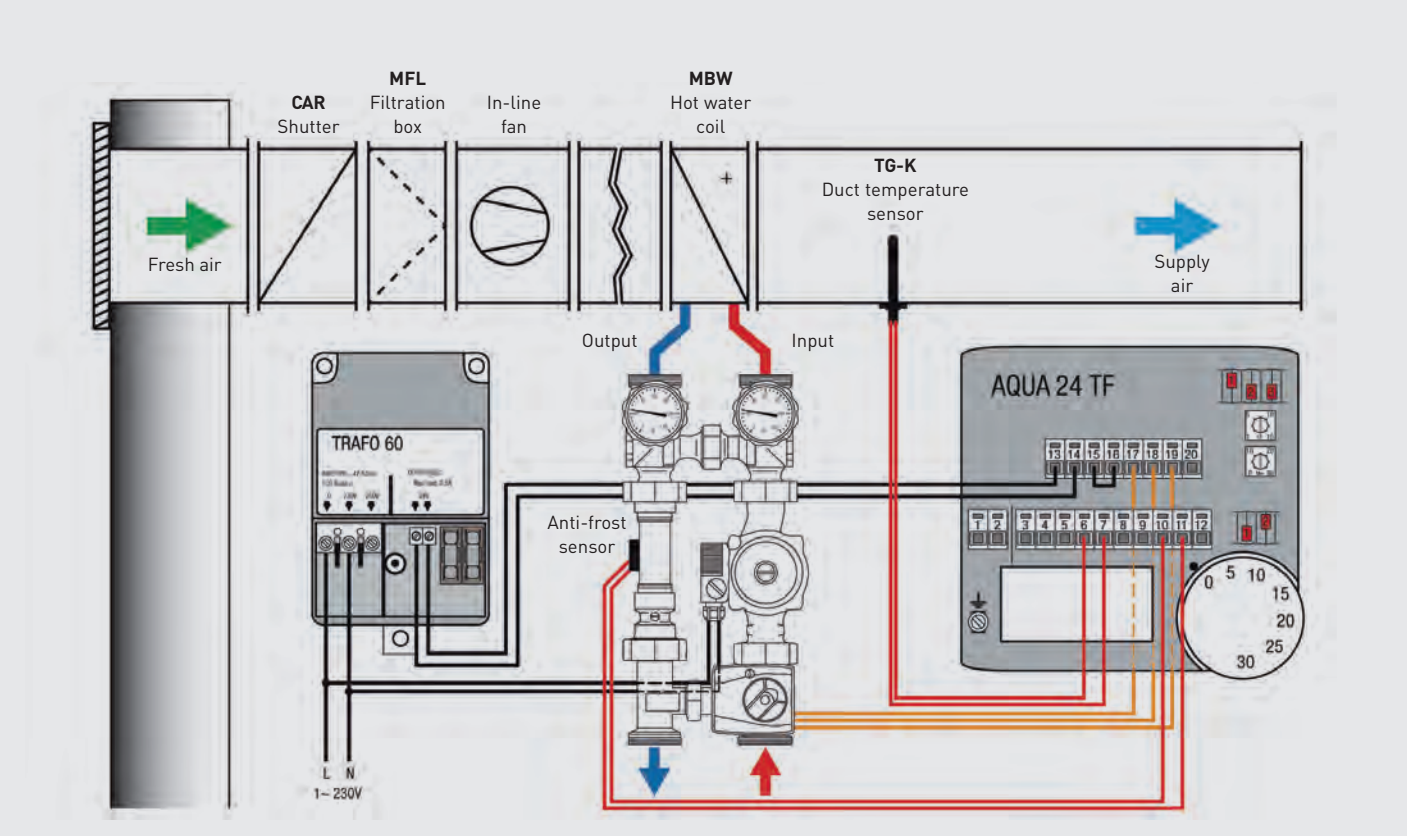

3-Way valves with 3-point actuator

Three way motorised control valve, (CCV) ps 16 bar.
Rp" internal nut.
Nickel-plated forged brass casing.
Stainless steel valve cone.
Stainless steel shaft.
Average temperatures -10..+120.
5Nm mounted rotary actuator.
AC 230V 3-point on-off.
90 s/90° valve response time.
IP 54, automatic or manual activation.

3-Way valves with proportional actuator

Three way motorised control valve, (CCV) ps 16 bar.
Rp" internal nut.
Nickel-plated forged brass casing.
Stainless steel valve cone.
Stainless steel shaft.
Average temperatures -10..+120.
5Nm mounted rotary actuator.
AC/DC 24V, proportional.
90 s/90° valve response time.
DC 2....10V working range.
IP 54, automatic or manual activation.

Valve dimensioning diagram

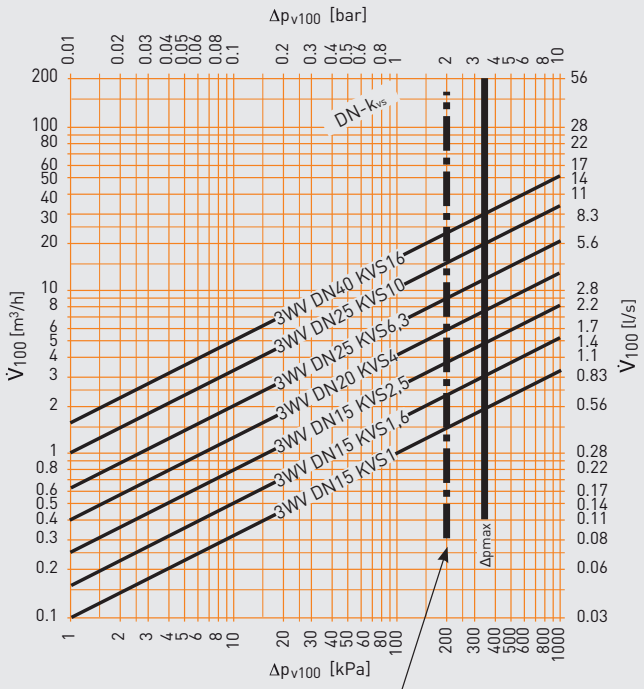

For silent running operation

Δp_{V100}: Differential pressure with valve fully opened

V_{100}: Nominal flow at Δp_{V100}

Connection Diagram

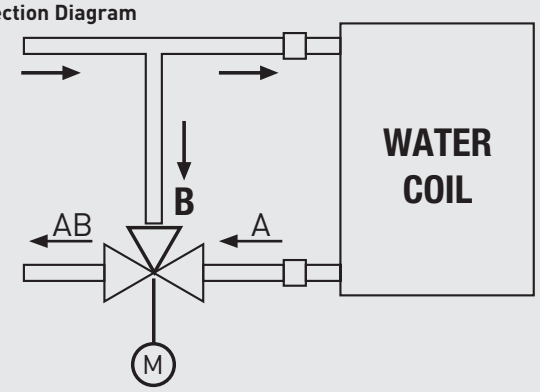

TRAFO 15-D

Transformer 230/24V AC.

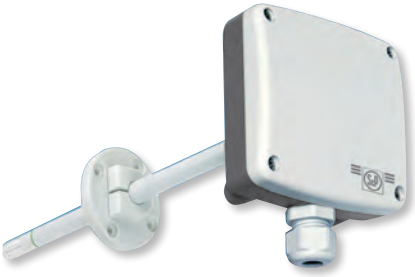

SCO2-G / SHT-G

SCO2-G
CO_2 sensor for the duct.
Enables control of the ventilation in sections of duct according to the CO_2 concentration of the air circulating through it.
Output signal: 4-20 mA.
Power supply: 24 VDC.

SHT-G
Temperature and relative humidity sensor for the duct.
Enables control of the ventilation in sections of duct according to the temperature and relative humidity of the air circulating through it.
Output signal: 0-10 V.
Power supply: 24 VDC.

Model	Electrical supply	Power (W)	Voltage	IP Protection	CO_2 range	HR range	Dimensions LxWxH (mm)
SCO2-G	24VDC-24VAC	5	4-20mA	Box IP65. Sensor IP20	0-2000 pm	–	80x238x80
SHT-G			0-10V			0~100%	

Model SCO2-A

SCO2-A / SCO2-AD / SCHT-AD

SCO2-A
Ambient CO_2 and temperature sensor.

SCO2-AD
Ambient CO_2 and temperature sensor with display.

SCHT-AD
Ambient CO_2 sensor, temperature and relative humidity with display.

Models SCO2-AD and SCHT-AD

Model	Electrical supply	Power (W)	Voltage	Height installation	IP Protection	CO_2 range	Temperature range	HR range	Dimensions LxWxH (mm)
SCO2-A	24VDC-24VAC	5	4-20mA	1,5-3,5 m	IP20	0-2000 pm	0-50ºC	–	85x26x100
SCO2-AD			0-10V						
SCHT-AD								0-100%	

TDP-S / TDP-D

TDP-S
Pressure sensor.
Enables you to control the pressure in the fan inlet.

TDP-D
Pressure sensor, with display.
Enables you to control the pressure in the fan inlet.

Model	Electrical supply	Maximum power (VA)	Ø Connector (mm)	Voltage	IP Protection	Pressure range	Dimensions LxWxH (mm)
TDP-S	24VAC-24VDC	4	6,2	0-10 V / 4-20 mA	IP54	0-2500 Pa	75x36x80
TDP-D							

CPFL-S / CPFL-E

CPFL
Presence detector for ceiling mount, sensitive to infrared radiation emitted by bodies in movement, with a 360º detecting angle.
Power supply: 1-230 V.

CPFL-S: Surface model.
CPFL-E: Flush mount model.

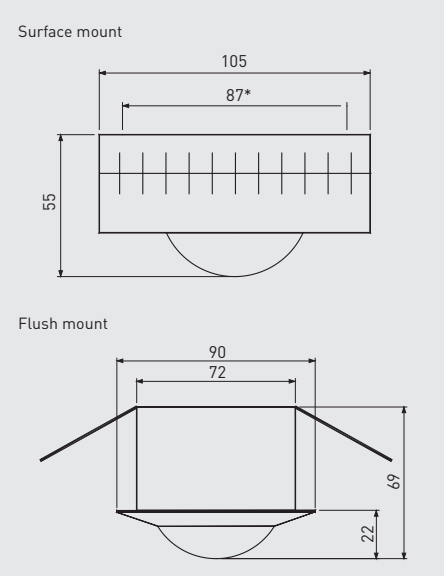

* Distance between mounting holes.

Model	Electrical supply	Power (W)	Settings	Height installation	IP Protection	Operating temperature range
CPFL	230V-50Hz	1,2	Timing 5s-15 min Luminosity 5-1000 lux	2,5-3,5 m	IP21	0ºC to +45ºC max 95% HR without condensation

Use of the presence detector	
Installed height (m)	Diameter of the detection zone at the floor (m)
2,5	6,4
3	7,7
3,5	9

REB-ECOWATT

Remote speed control.
Enables the speed control of the fan continuously, manually and remote.
Power supply: 1-230 V.

Model	IP Protection	Class	Operating temperature range	Dimensions LxWxH (mm)
REB-ECOWATT	IP44	II (⧈)	-10ºC to +50ºC	80x68x80

S&P UK VENTILATION SYSTEMS LTD

S&P House, Wentworth Road, Ransomes Europark
Ipswich, Suffolk, IP3 9SW
Tel: 08454 700 074
Fax: 08454 700 075
sales.uk@solerpalau.com
www.solerpalau.co.uk

Soler&Palau
Ventilation Group